F.A.P. RTE.	SECTION	COUNTY	TOTAL SHEETS	SHEET NO.
95	*	JASPER	546	236
STA.		TO STA.		
FED. ROAD DIST. NO.	ILLINOIS	FED. AID PROJECT		

*(5,6)Y,RS-2,6BR-7
CONTRACT NO. 94437

DESIGN		
INT.	DATE	REASON

PLOTS & CHECKS			
INT.	DATE	NO.	REASON

CHECKS		
INT.	DATE	REASON

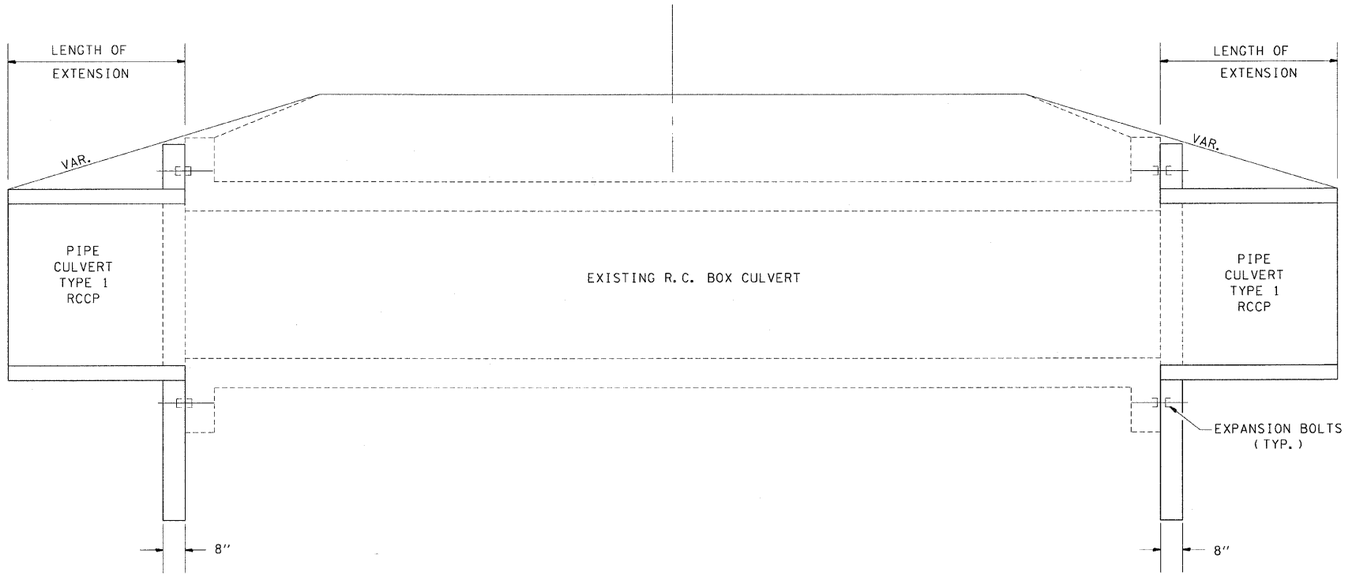

NOTE:
EXPANSION BOLTS SHALL CONSIST OF SELF-DRILLING EXPANSION SHIELDS AND 3/4" Ø HOOKED BOLTS. HOOKED BOLTS SHALL EXTEND A MINIMUM OF 6" INTO NEW CONCRETE.

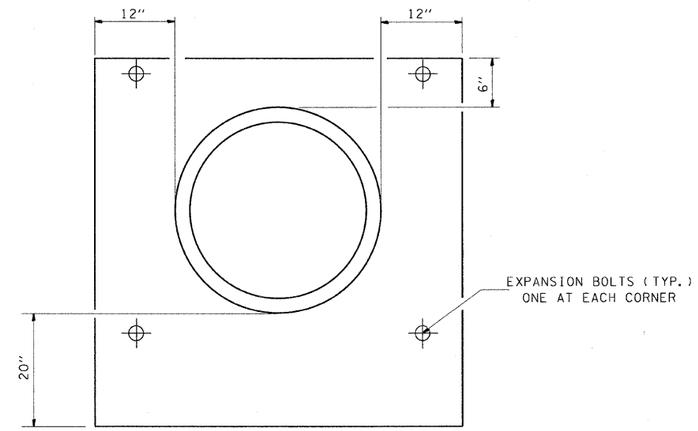

END VIEW
DETAIL OF ANCHOR WALL

"H" OR "S" FEET	NO. EXPAN. BOLTS PER SIDE			
	EXTEN. ≤ 15'		EXTEN. > 15'	
	NO.	SPACE	NO.	SPACING
2'	*	*	*	*
2'-6"	2	18"	2	18"
3'	2	24"	2	24"
4'	3	18"	3	18"
5'	4	16"	3	24"
6'	5	15"	4	20"
7'	5	18"	4	24"
8'	6	15"	5	21"
9'	6	19"	5	24"
10'	7	18"	6	21"
11'	8	17"	6	24"
12'	8	19"	7	22"

* NOTE: USE MINIMUM OF 1 EXPANSION BOLT AT EACH CORNER

EXPANSION BOLTS REQUIRED FOR CULVERT EXTENSIONS

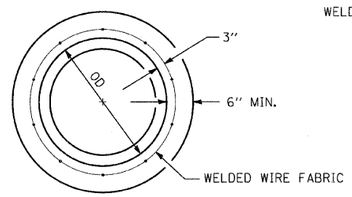

SECTION A-A

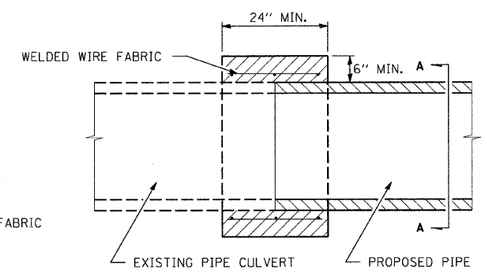

SIDE	STATION	S	H	3/4" Ø EXPANSION BOLTS	CONCRETE COLLAR
		IN	IN	EACH	CU. YD.
LT.	753+25.80	24	24	4	0.47
RT.	753+25.80	24	24	4	0.47
LT.	1003+60	24	18	4	0.40
RT.	1003+60	24	18	4	0.40
LT.	1082+76	-	-	-	0.35
RT.	1082+76	-	-	-	0.35
TOTALS				16	2.44

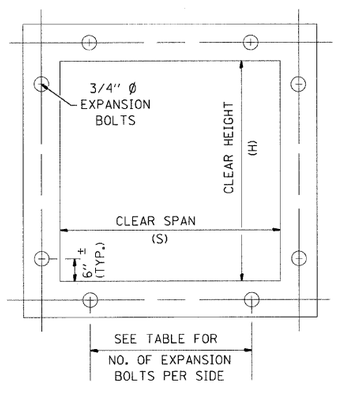

CROSS SECTION THRU EXISTING BARREL

CONCRETE COLLAR DETAILS

NOTES

1. CLASS SI CONCRETE SHALL BE USED THROUGHOUT.
2. WELDED WIRE FABRIC SHALL BE 6" x 6". (0.63 LB/SQ FT)
3. THE COST OF THE CONCRETE COLLAR INCLUDING WELDED WIRE FABRIC SHALL BE PAID FOR AT THE CONTRACT UNIT PRICE PER CUBIC YARD FOR CONCRETE COLLAR.
4. THE CONTRACTOR SHALL MAKE PIPES FOR CULVERT EXTENSIONS OF THE SAME TYPE AND SIZE, AS SPECIFIED IN THE PLANS AND THE STANDARD SPECIFICATIONS.
5. EXPANSION BOLTS SHALL BE PAID FOR AT THE CONTRACT UNIT PRICE PER EACH FOR EXPANSION BOLTS 3/4 INCH.

REVISIONS	
NAME	DATE

ILLINOIS DEPARTMENT OF TRANSPORTATION

CONCRETE COLLAR
FOR PIPE CULVERT EXTENSIONS

FAP ROUTE 95 (IL RTE. 33)
SECTION (5,6)Y,RS-2,6BR-7
JASPER COUNTY

SCALE: VERT. HORIZ.
DATE: 09/18/02

DRAWN BY: BISHOP
DESIGNED BY: COLBROOK
CHECKED BY: COLBROOK

GREENE & BRADFORD, INC.
OF SPRINGFIELD
CONSULTING ENGINEERS
3510 CONSTITUTION DRIVE
SPRINGFIELD, ILLINOIS 62707
PROFESSIONAL DESIGN FIRM: IDL-184-000175
PROFESSIONAL DESIGN FIRM: IDPR-184-000175 CORPORATION
(217) 793-3844, (217) 753-5287 FX, E-MAIL: info@greenebradford.com

COMPUTER FILE NO.
DETAILS - 50

PROJECT 01256
2/26/10-FAV

IDOTPL-50 1"=50' 8/07/00

DISTRICT STANDARDS - F.A.P. ROUTE 95 (IL RTE. 33) JASPER COUNTY