STATE OF ILLINOIS
DEPARTMENT OF TRANSPORTATION

ROUTE NO.	SECTION	COUNTY	TOTAL SHEETS	SHEET NO.
FAP 95	*	JASPER	546	271
FED. ROAD DIST. NO.		ILLINOIS	FED. AID PROJECT-	

SHEET NO. 4
6 SHEETS

* (5,6)Y, RS-2, 6BR-7
Contract #94437

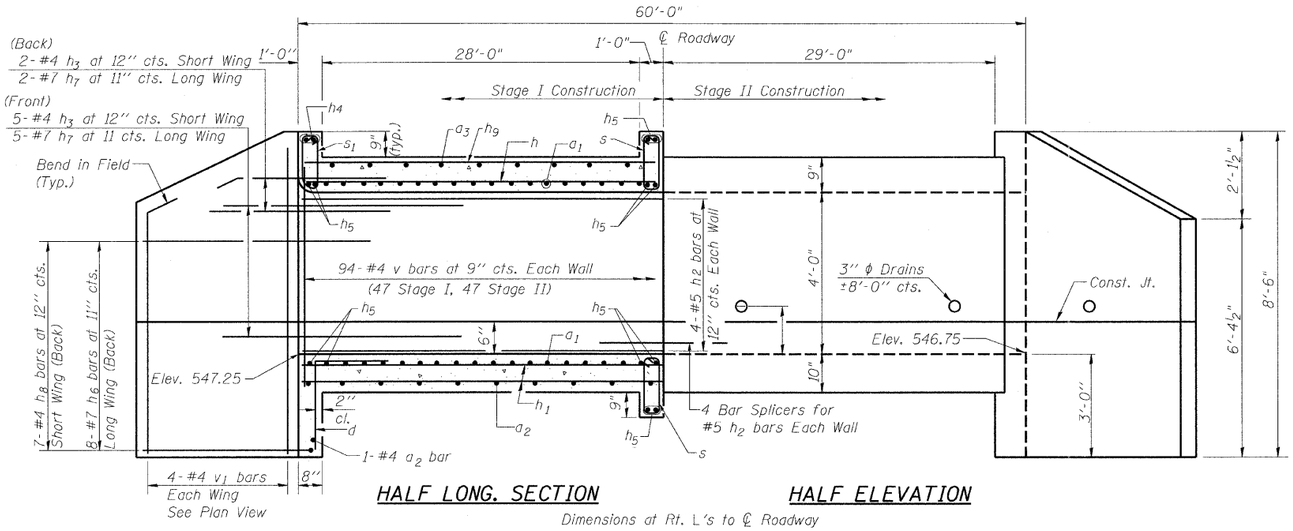

HALF LONG. SECTION

HALF ELEVATION

Dimensions at Rt. L's to ℄ Roadway

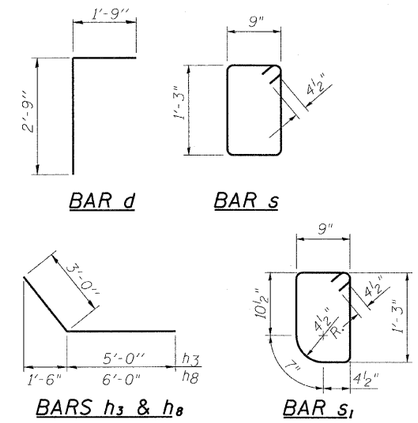

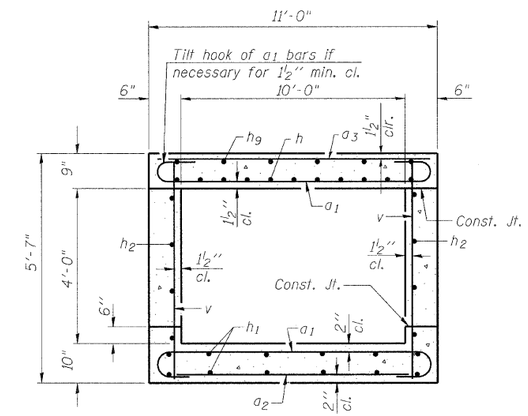

SECTION THRU BARREL

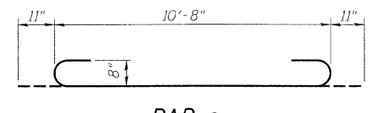

BAR a_1

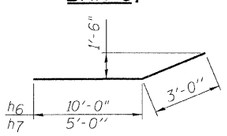

BARS h_6 & h_7

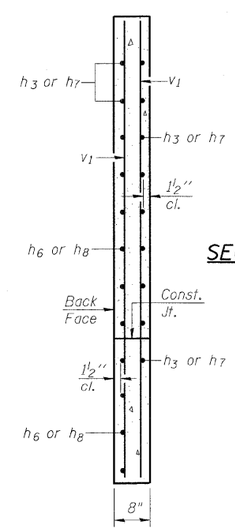

SECTION A-A

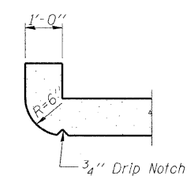

SECTION THRU HEADWALL
(Up Stream End Only)

* 28-#8 a_1 bars at 6" cts. Bott. of Top Slab
14 Stage I, 14 Stage II
* 28-#8 a_1 bars at 6" cts. Top of Bott. Slab
14 Stage I, 14 Stage II
* 8-#4 a_2 bars at 2'-0" cts. Bott. of Bott. Slab
4 Stage I, 4 Stage II
* 10-#5 a_3 bars at 18" cts. Top of Top Slab
5 Stage I, 5 Stage II

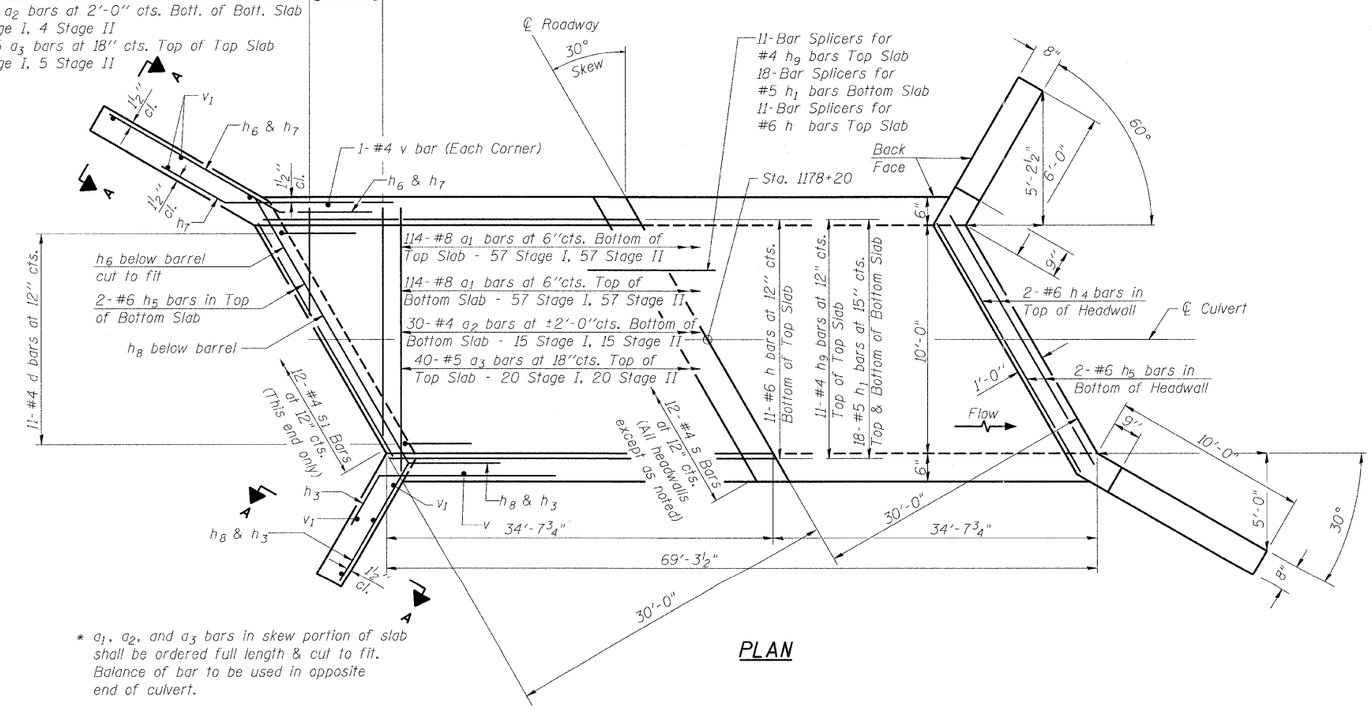

PLAN

* a_1, a_2, and a_3 bars in skew portion of slab shall be ordered full length & cut to fit. Balance of bar to be used in opposite end of culvert.

BILL OF MATERIAL

Bar	No.	Size	Length	Shape
a_1	284	#8	12'-6"	
a_2	38	#4	10'-8"	
a_3	50	#5	10'-8"	
d	22	#4	4'-6"	
h	22	#6	34'-4"	
h_1	36	#5	34'-4"	
h_2	16	#5	34'-4"	
h_3	14	#4	8'-0"	
h_4	4	#6	11'-6"	
h_5	16	#6	12'-5"	
h_6	16	#7	13'-0"	
h_7	14	#7	8'-0"	
h_8	14	#4	9'-0"	
h_9	22	#4	34'-4"	
s	36	#4	4'-9"	
s_1	12	#4	4'-7"	
v	192	#4	5'-3"	
v_1	16	#4	8'-3"	
Concrete Box Culverts			Cu. Yd.	63.6
Reinforcement Bars			Pound	15,970

REVISIONS	
NAME	DATE

ILLINOIS DEPARTMENT OF TRANSPORTATION

DETAILS

F.A.P. 95 (IL RTE 33) OVER DRAINAGE DITCH
SECTION (5,6)Y, RS-2, 6BR-7
STA. 1178+20.00
JASPER COUNTY
S.N. 040-2011

SCALE: VERT. HORIZ.
DATE: 11/22/04
DRAWN BY: LANDREY
DESIGNED BY: SANFORD
CHECKED BY: TRELLO

GREENE & BRADFORD, INC.
OF SPRINGFIELD
CONSULTING ENGINEERS
SPRINGFIELD, ILLINOIS 62707
PROFESSIONAL DESIGN FIRM NO. 184-000179
PROFESSIONAL & STRUCTURAL ENGINEERING CORPORATION
(217) 793-3884, (217) 793-5237 (FILE 184), - EMAIL - SPRINGFIELD@GREENEANDBRADFORD.COM

COMPUTER FILE NO. 01256DET
PROJECT 01256
3/11/10-MDS

FILE NAME = J:\01256\DRAWINGS\SN040-2011\01256DET.dgn
PLOT SCALE = 0:1:/ In. DRV
PLOT DATE = 3/17/2010
PLOT TIME = 5:29:17 PM
OPERATOR = FFGRNKV

CULVERT PLANS - F.A.P. ROUTE 95 (IL RTE. 33) JASPER COUNTY