F.A.P. RTE.	SECTION	COUNTY	TOTAL SHEETS	SHEET NO.
95	*	JASPER	546	275
STA.		TO STA.		
FED. ROAD DIST. NO.	ILLINOIS	FED. AID PROJECT		

*(5,6)Y,RS-2,6BR-7
CONTRACT NO. 94437

DESIGN		
INT.	DATE	REASON

PLOTS & CHECKS			
INT.	DATE	NO.	REASON

CHECKS		
INT.	DATE	REASON

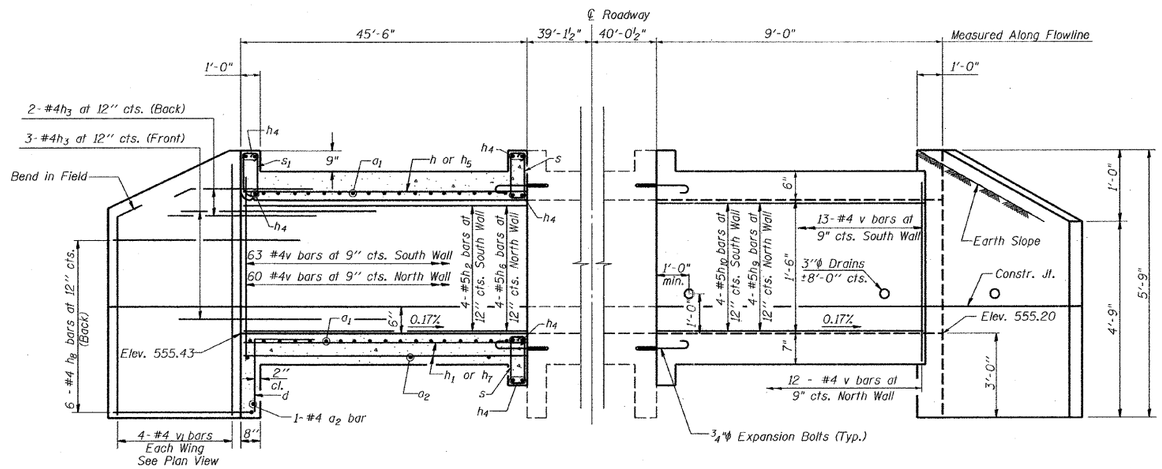

HALF LONG. SECTION

HALF ELEVATION

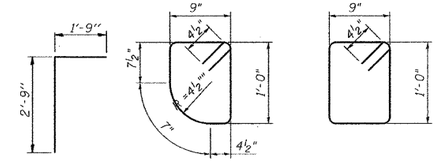

BAR d

BAR s1

BAR s

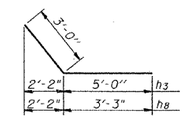

BARS h3 & h8

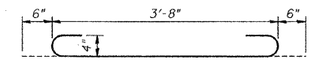

BAR a1

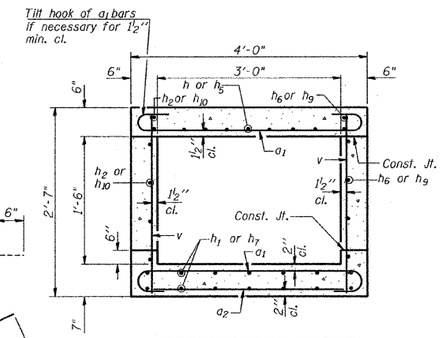

SECTION THRU BARREL

h9	7'-3"	11"
h5, h7, h10	7'-10"	1'-6"
h6	43'-7"	10"
h, h1, h2	44'-3"	1'-6"

BARS h, h1, h2, h5, h6, h7, h9, h10

BILL OF MATERIAL STA. 1030+94

Bar	No.	Size	Length	Shape
a1	208	#4	4'-8"	
a2	32	#4	3'-9"	
d	8	#4	4'-6"	
h	4	#5	45'-9"	
h1	8	#4	45'-9"	
h2	5	#5	45'-9"	
h3	20	#4	8'-0"	
h4	24	#6	3'-9"	
h5	4	#5	9'-4"	
h6	5	#5	44'-5"	
h7	8	#4	9'-4"	
h8	24	#4	6'-3"	
h9	5	#5	8'-2"	
h10	5	#5	9'-4"	
s	20	#4	4'-3"	
s1	4	#4	4'-1"	
v	152	#4	2'-4"	
v1	16	#4	5'-6"	
Concrete Box Culverts			Cu. Yd.	14.7
Reinforcement Bars			Pound	2,550
Expansion Bolts ¾ Inch			Each	16

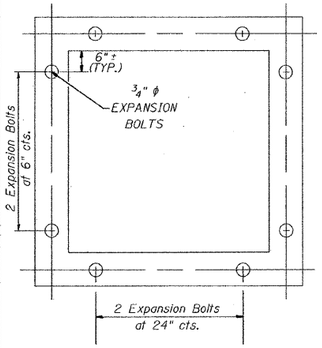

CROSS SECTION THRU BARREL

Note:
Expansion Bolts shall be ¾"φ hooked bolts. Hooked bolts shall extend a minumum of 9" into new concrete.

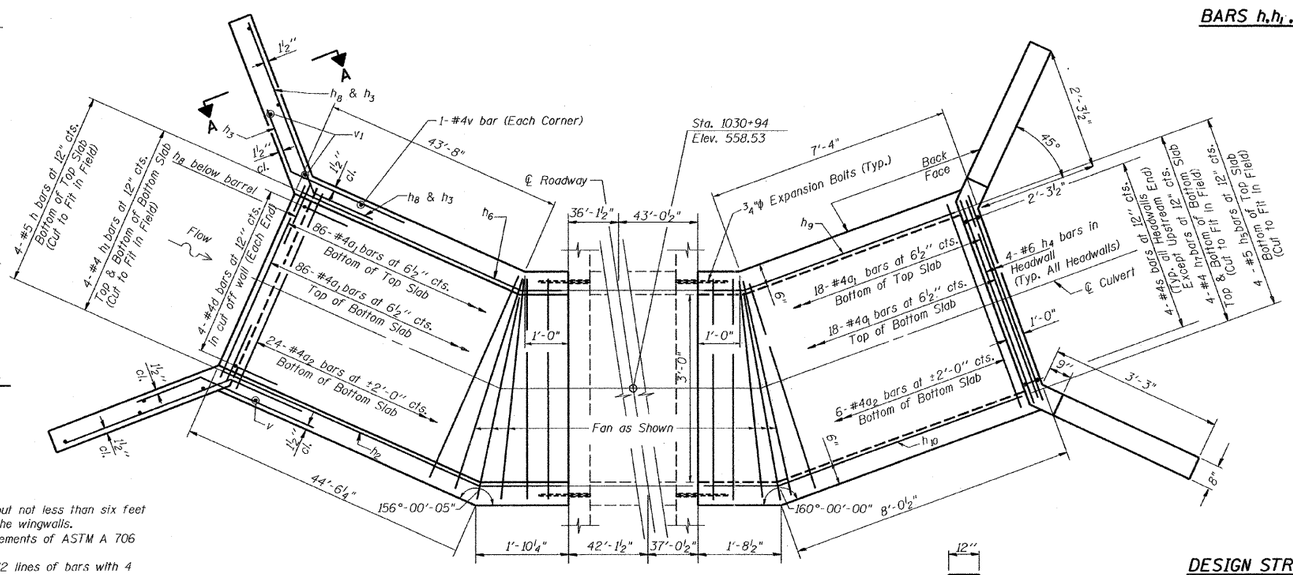

PLAN

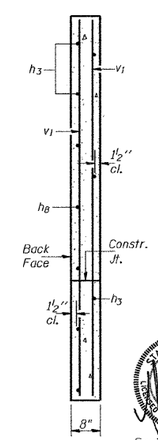

SECTION A-A

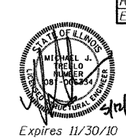

NOTES

A distance of half the length of the wingwall but not less than six feet of the barrel shall be poured monolithically with the wingwalls.

Reinforcement bars shall conform to the requirements of ASTM A 706 Gr 60.

Bars indicated thus 12 x 4-#5 etc. indicates 12 lines of bars with 4 lengths per line.

All construction joints shall be bonded.

Plan dimensions and details relative to existing plans are subject to nominal construction variations. The Contractor shall field verify existing dimensions and details affecting new construction and make necessary approved adjustments prior to construction or ordering of materials. Such variations shall not be cause for additional compensation for a change in scope of the work, however, the Contractor will be paid for the quantity actually furnished at the unit price bid for the work.

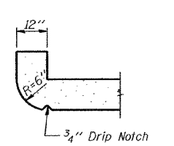

SECTION THRU HEADWALL
(Up Stream End Only)

DESIGN STRESSES
fy = 60,000 psi
f'c = 3,500 psi

LOADING HS 20-44

REVISIONS	
NAME	DATE

ILLINOIS DEPARTMENT OF TRANSPORTATION

BOX CULVERT EXTENSION AT STA. 1030+94

FAP ROUTE 95 (IL RTE. 33)
SECTION (5,6)Y,RS-2,6BR-7
JASPER COUNTY

SCALE: VERT. HORIZ.
DATE: 09/18/02

DRAWN BY: JAMESON
DESIGNED BY: COLBROOK
CHECKED BY: SANFORD

GREENE & BRADFORD, INC. OF SPRINGFIELD
CONSULTING ENGINEERS
2500 CONSTITUTION DRIVE
SPRINGFIELD, ILLINOIS 62703
PROFESSIONAL DESIGN FIRM 184-000-005
PROFESSIONAL & STRUCTURAL ENGINEERING CORPORATION
(217) 753-8474, (217) 753-3227 FX, E-MAIL: - contact@greenebradford.com

COMPUTER FILE NO. DETAILS-4 - 50
PROJECT 01256
2/26/10-FAV

IDOTPL-50 1"=50' 8/07/00