DESIGN		
INT.	DATE	REASON

PLOTS & CHECKS			
INT.	DATE	NO.	REASON

CHECKS		
INT.	DATE	REASON

F.A.P. RTE.	SECTION	COUNTY	TOTAL SHEETS	SHEET NO.
95	*	JASPER	546	297
STA.		TO STA.		
FED. ROAD DIST. NO.	ILLINOIS	FED. AID PROJECT		

*(5,6)Y,RS-2,6BR-7
CONTRACT NO. 94437

DETAIL OF PRECAST CONCRETE BOX CULVERT END SECTION

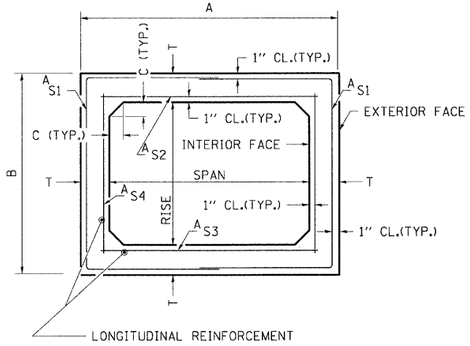

CROSS SECTION

AASHTO DESIGNATION M259 (2' OR MORE COVER)

DESIGN LOADING:
TABLE 1 = HS20
TABLE 2 = INTERSTATE LOADING

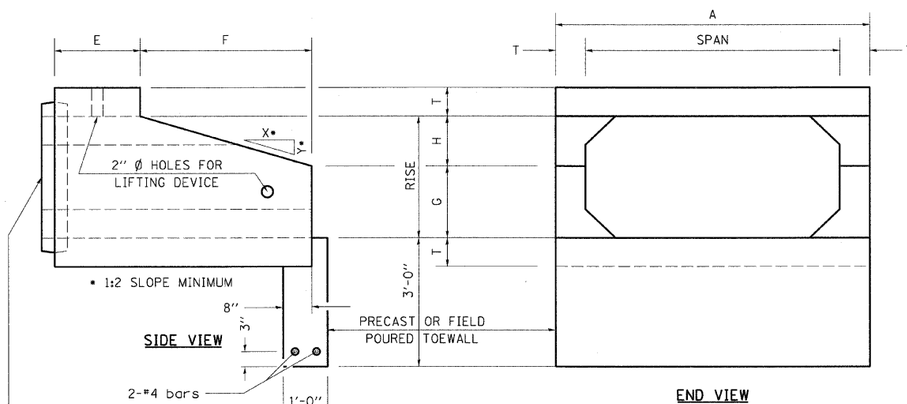

SIDE VIEW

END VIEW

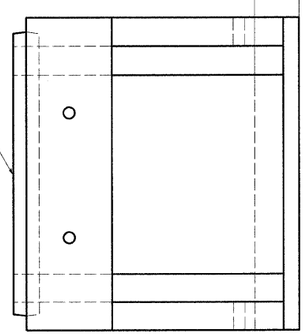

PLAN

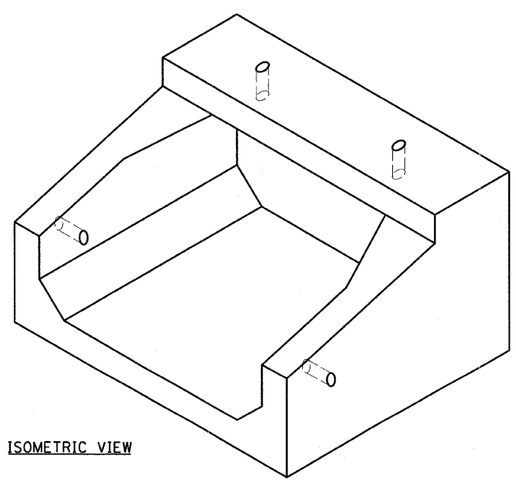

ISOMETRIC VIEW

GENERAL NOTES

SHOP PLANS FOR THE REINFORCEMENT SHALL BE SUBMITTED IN ACCORDANCE WITH THE REQUIREMENTS OF ARTICLE 540.06 OF THE STANDARD SPECIFICATIONS.

MINIMUM CONCRETE STRENGTH SHALL BE 5000 PSI AFTER 28 DAYS.

THE JOINTS OF THE PRECAST BOX SECTIONS SHALL BE SEALED IN ACCORDANCE WITH ARTICLE 504.06 OF THE STANDARD SPECIFICATIONS FOR ROAD AND BRIDGE CONSTRUCTION.

THE TERMS As_1, As_2, As_3, AND As_4 DENOTE THE REQUIRED STEEL AREAS FOR REINFORCEMENT AS SPECIFIED IN AASHTO M273.

REINFORCEMENT SHALL BE WELDED WIRE FABRIC CONFORMING TO AASHTO SPECIFICATIONS M55 OR M221.

LIFTING HOLES SHALL BE FILLED IN ACCORDANCE WITH 540.02 OR PROJECT SPECIAL PROVISIONS.

DESIGN FILL HEIGHT (F):

MAXIMUM FILL HEIGHT (fmax) AND MINIMUM FILL HEIGHT (fmin) ARE MEASURED BETWEEN THE EXTREME EDGES OF SHOULDER.

fmax/fmin (FT)	F (FT)	AASHTO
fmin < 2'	< 2'	M273
2' ≤ fmin < 3'	2'	M259
3' ≤ fmin < 4'	3'	M259
fmin ≥ 4'	fmax	M259

DESIGN FILL HEIGHTS APPLY TO ENTIRE CULVERT, INCLUDING EXTENSIONS AND END SECTIONS.

CULVERT SIZE	DIMENSIONS **								
SPANxRISE (FOOT)	T	A	B	C	E	F	G	H	SLOPE
	INCH	FT-IN	FT-IN	INCH	FT-IN	FT-IN	FT-IN	FT-IN	Y:X
* 2x2	4	2-8	2-8	4	3-0	3-0	1-0	1-0	1:3
3x2	4	3-8	2-8	4	3-0	3-0	1-0	1-0	1:3
3x3	4	3-8	3-8	4	2-0	4-0	1-8	1-4	1:3
4x2	5	4-10	2-10	5	3-0	3-0	1-0	1- 0	1:3
4x3	5	4-10	3-10	5	2-0	4-0	1-8	1-4	1:3
4x4	5	4-10	4-10	5	2-0	4-0	2-0	2-0	1:2
* 4x6	7	5-2	7-2	7	2-0	6-0	3-0	3-0	1:2
* 5x2	5	5-10	2-10	6	3-0	3-0	1-0	1-0	1:3
5x3	6	6-0	4-0	6	2-0	4-0	1-8	1-4	1:3
5x4	6	6-0	5-0	6	2-0	4-0	2-0	2-0	1:2
5x5	6	6-0	6-0	6	2-0	4-0	3-0	2-0	1:2
* 6x2	7	7-2	3-2	7	3-0	3-0	1-0	1-0	1:3
6x3	7	7-2	4-2	7	2-0	4-0	1-8	1-4	1:3
6x4	7	7-2	5-2	7	2-0	4-0	2-0	2-0	1:2
6x5	7	7-2	6-2	7					
6x6	7	7-2	7-2	7	2-0	6-0	3-0	3-0	1:2
7x4	8	8-4	5-4	8	2-0	4-0	2-0	2-0	1:2
7x5	8	8-4	6-4	8					
7x6	8	8-4	7-4	8					
7x7	8	8-4	8-4	8					
8x4	8	9-4	5-4	8	2-0	4-0	2-0	2-0	1:2
8x5	8	9-4	6-4	8					
8x6	8	9-4	7-4	8					
8x7	8	9-4	8-4	8					
8x8	8	9-4	9-4	8					
9x5	9	10-6	6-6	9					
9x6	9	10-6	7-6	9					
9x7	9	10-6	8-6	9					
9x8	9	10-6	9-6	9					
9x9	9	10-6	10-6	9					
10x5	10	11-8	6-8	10					
10x6	10	11-8	7-8	10					
10x7	10	11-8	8-8	10					
10x8	10	11-8	9-8	10					
10x9	10	11-8	10-8	10					
10x10	10	11-8	11-8	10					
11x4	11	12-10	5-10	11					
11x6	11	12-10	7-10	11					
11x8	11	12-10	9-10	11					
11x10	11	12-10	11-10	11					
11x11	11	12-10	12-10	11					
12x4	12	14-0	6-0	12					
12x6	12	14-0	8-0	12					
12x8	12	14-0	10-0	12					
12x10	12	14-0	12-0	12					
12x12	12	14-0	14-0	12					
CULVERTS WITH RISE > 6' REQUIRE CAST-IN-PLACE END SECTIONS									

* NON-STANDARD SIZES PER AASHTO.

** "T" MAY BE LARGER THAN SHOWN ON TABLE, PER AASHTO SPECIFICATIONS.

REVISIONS	
NAME	DATE

ILLINOIS DEPARTMENT OF TRANSPORTATION

DETAILS OF PRECAST CONCRETE BOX CULVERT END SECTION

FAP ROUTE 95 (IL RTE. 33)
SECTION (5,6)Y,RS-2,6BR-7
JASPER COUNTY

SCALE: VERT. HORIZ.
DATE: 09/18/02

DRAWN BY: BISHOP
DESIGNED BY: COLBROOK
CHECKED BY: COLBROOK

GREENE & BRADFORD, INC.
OF SPRINGFIELD
CONSULTING ENGINEERS
2500 CONSTITUTION DRIVE
SPRINGFIELD, ILLINOIS 62707
PROFESSIONAL DESIGN FIRM IDL-PM-0007
PROFESSIONAL & STRUCTURAL ENGINEERING CORPORATION
(217) 757-8544, (217) 757-5227 FILE MAIL - (name@greenebradford.com)

COMPUTER FILE NO. PRECAST - 50
PROJECT 01256
2/26/10-FAV

IDOTPL-50 1"=50' 8/07/00

DISTRICT STANDARDS - F.A.P. ROUTE 95 (IL RTE. 33) JASPER COUNTY