CONTRACT NO. 62956

F.A.P. RTE.	SECTION	COUNTY	TOTAL SHEETS	SHEET NO.
347	2525.3-1H-BR	COOK	17	6
STA.		TO STA.		
FED. ROAD DIST. NO.	ILLINOIS	FED. AID PROJECT		

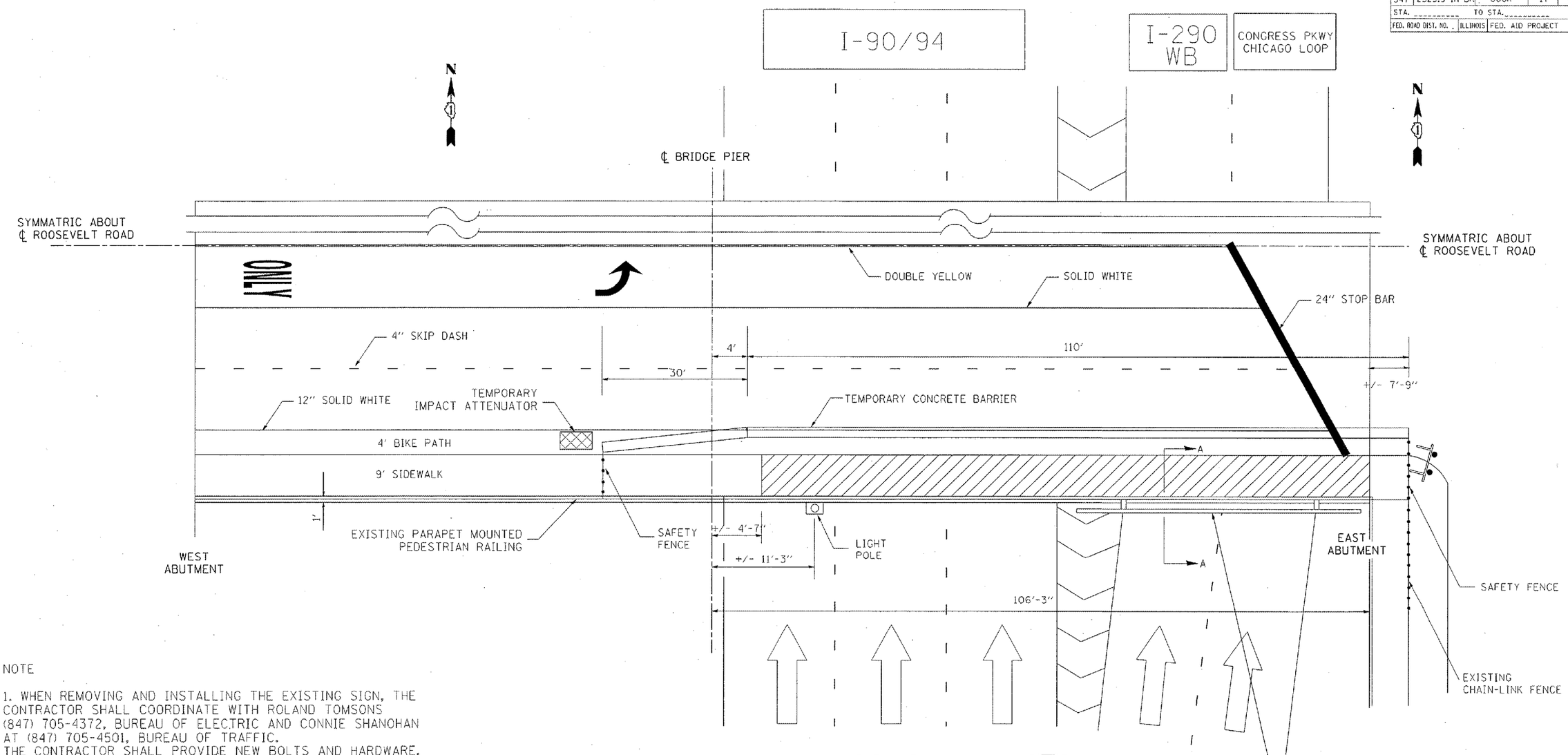

NOTE

1. WHEN REMOVING AND INSTALLING THE EXISTING SIGN, THE CONTRACTOR SHALL COORDINATE WITH ROLAND TOMSONS (847) 705-4372, BUREAU OF ELECTRIC AND CONNIE SHANOHAN AT (847) 705-4501, BUREAU OF TRAFFIC. THE CONTRACTOR SHALL PROVIDE NEW BOLTS AND HARDWARE, BUT CAN REUSE SUPPORT BRACKETS. THE TRANSFER OF ANY IDOT LIGHTS AFFECTED BY THE SIGN REMOVAL SHALL BE COORDINATED WITH RAO VAITLA AT THE ELECTRICAL MAINTENANCE OFFICE AT (847) 221-3079 BEFORE THE SIGN STRUCTURE IS REMOVED.

2. WHEN REMOVING AND INSTALLING THE EXISTING LIGHT POLE, THE CONTRACTOR SHALL COORDINATE WITH THE CITY OF CHICAGO. COST INCLUDED WITH CONCRETE REMOVAL. THE CONTRACTOR SHALL CONTACT BRUCE SPYCHALA AT (312) 746-5049, 24 HOURS MINIMUM BEFORE ANY WORK COMMENCES ON THE LIGHT POLE.

3. CLOSE SOUTH SIDEWALK AND BIKE PATH PER STATE STANDARD 701801. COST OF SAFETY FENCE INCLUDED IN COST OF "TRAFFIC CONTROL AND PROTECTION, STANDARD 701801."

TYPE III BARICADE WITH FLASHING LIGHTS

WORK AREA

SIGN OR SIGN W/ STEADY BURN LIGHT AS SHOWN

TEMPORARY CONCRETE BARRIER

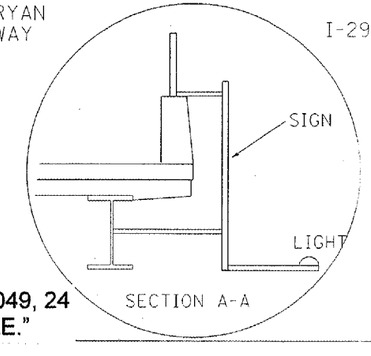

SECTION A-A

* "THE CONTRACTOR SHALL CONTACT BRUCE SPYCHALA, AT (312)746-5049, 24 HOURS MINIMUM BEFORE ANY WORK COMMENCES ON THE LIGHT POLE."

REVISIONS NAME	DATE

ILLINOIS DEPARTMENT OF TRANSPORTATION

TRAFFIC CONTROL PLAN

ROOSEVELT ROAD OVER DAN RYAN (I-90/94)

SCALE: VERT. N.T.S HORIZ. N.T.S

DATE

DRAWN BY SJK

CHECKED BY

Rev.

PLOT DATE : 1/25/2006
FILE NAME : c:\projects\m123304\m123304ea.m32
PLOT SCALE : 100.4337 ' / IN.
USER NAME : bonkal