CONTRACT NO. 66565

F.A.P. RTE.	SECTION	COUNTY	TOTAL SHEETS	SHEET NO.
681	113BR-2	LIVINGSTON	47	33
STA.		TO STA.		
FED. ROAD DIST. NO.	ILLINOIS	FED. AID PROJECT		

SHEET NO. B21

OF 31 SHEETS

STATE OF ILLINOIS
DEPARTMENT OF TRANSPORTATION

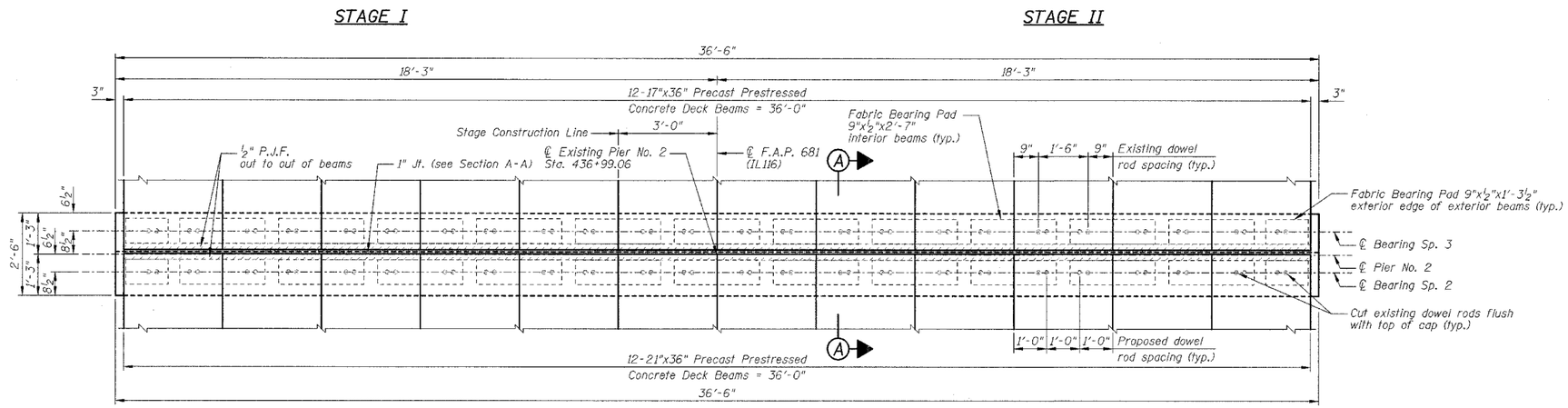

PLAN VIEW WITH BEAMS

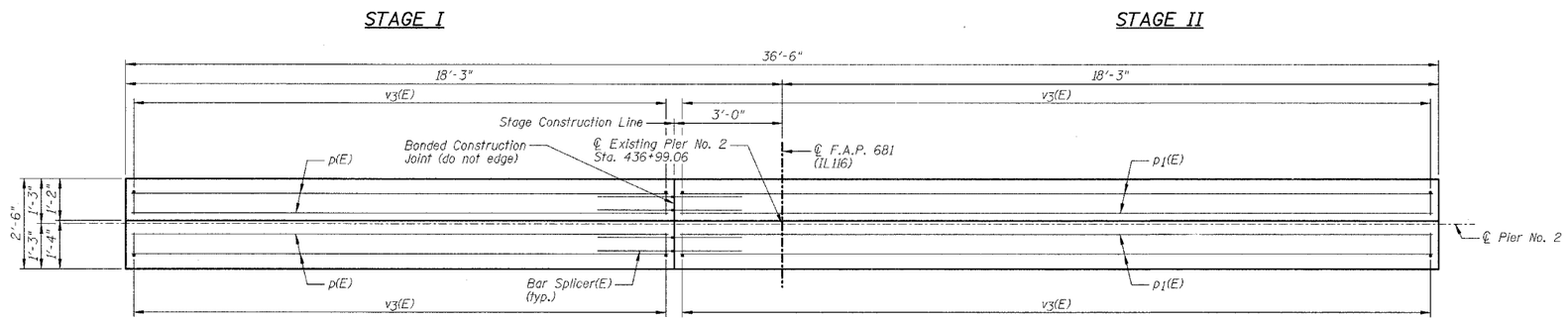

PLAN VIEW WITHOUT BEAMS

NOTES:

1.) Work this sheet with Sheets B20 & B22.
2.) See Sheet B5 for Bar Splicer Details.
3.) See Sheet B22 for Section A-A.
4.) Reinforcement bars designated (E) shall be epoxy coated.
5.) Drill & epoxy grout v3(E) bars in 6" (min.) drilled holes according to Section 584 of the Standard Specifications.
6.) Dowel rods drilled in cap are included in the cost of "Concrete Structures".
7.) The type of epoxy grout shall be approved by the Engineer.
8.) Space reinforcement in cap to miss dowel anchor hole locations.

REVISIONS	
NAME	DATE

ILLINOIS DEPARTMENT OF TRANSPORTATION

PIER NO. 2

F.A.P. 681 (IL116) OVER FELKY SLOUGH
SECTION 113BR-2
LIVINGSTON COUNTY
STATION 436+75.00
STRUCTURE NO. 053-0075

DESIGNED BY: JML DRAWN BY: DJM

DATE: 12/09/05 CHECKED BY: MSW