85368

ROUTE NO.	SECTION	COUNTY	TOTAL SHEETS	SHEET NO.
R.B.I. P.A. 245	98-20101-00-BR	BUREAU	65	52
FED. ROAD DIST. NO. 7	ILLINOIS	FED. AID PROJECT-BROS-011(62)		

STRUCTURAL SHEET 19 OF 25

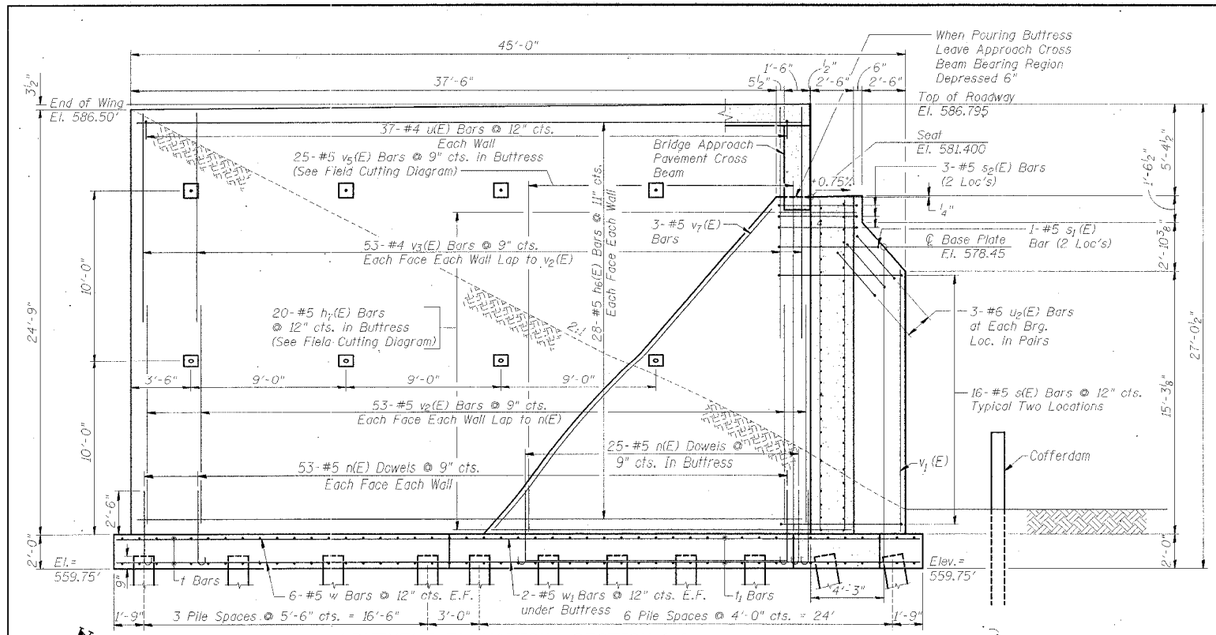

ABUTMENT ELEVATION -SECTION 1-1

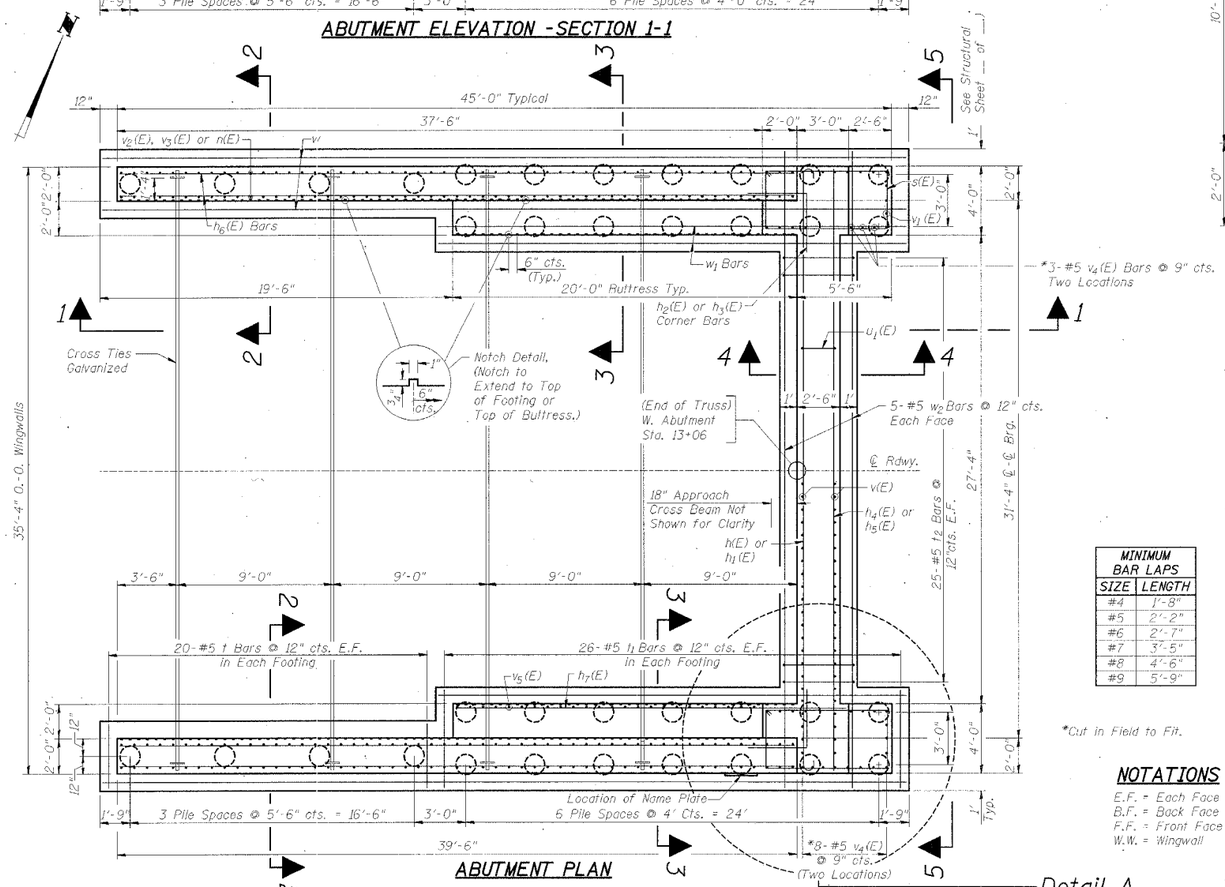

ABUTMENT PLAN

MINIMUM BAR LAPS	
SIZE	LENGTH
#4	1'-8"
#5	2'-2"
#6	2'-7"
#7	3'-5"
#8	4'-6"
#9	5'-9"

*Cut in Field to Fit.

NOTATIONS

E.F. = Each Face
B.F. = Back Face
F.F. = Front Face
W.W. = Wingwall

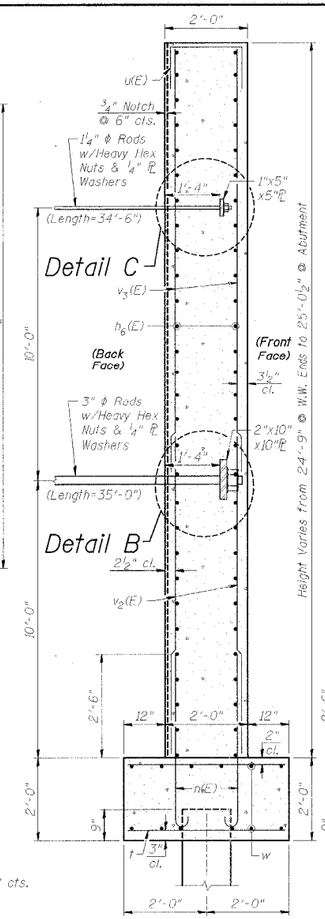

SECTION 2-2

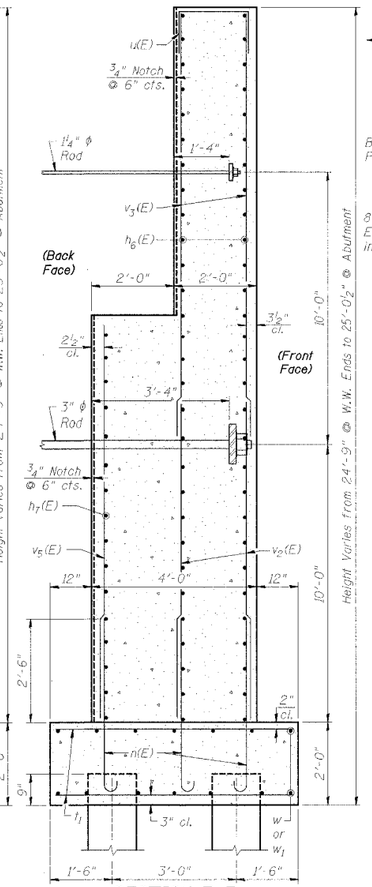

SECTION 3-3

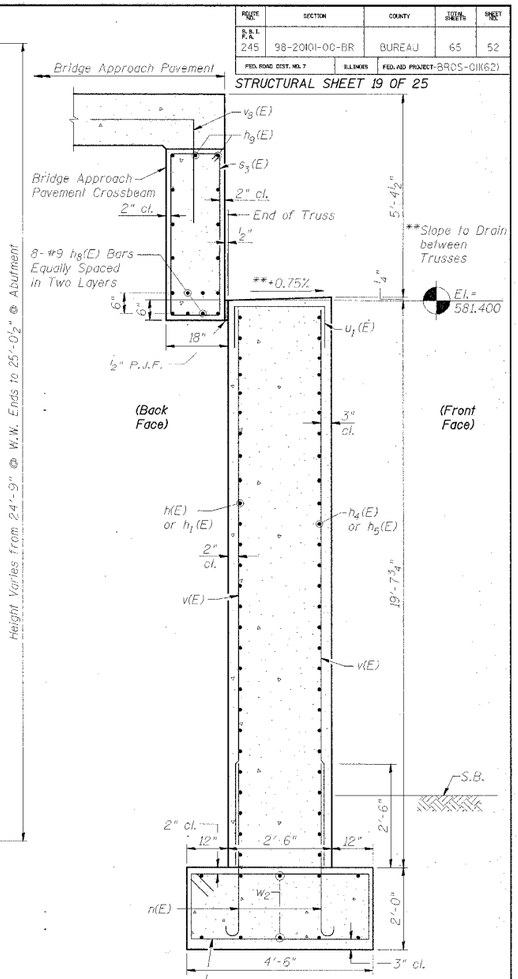

SECTION 4-4

PILE DATA

Type : 14" Metal Shell
Capacity : 65 Ton
Est. Length : 35'
No. Required : 35 Plus 1 Test Pile

NOTES:

See Structural Sheet 20 of 25 for Additional Details.

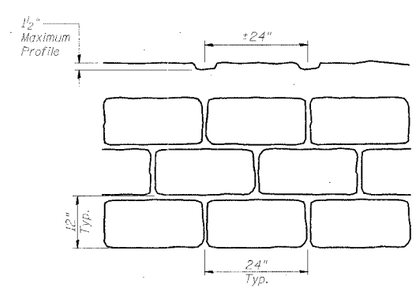

FORM LINER W/ TEXTURED SURAFCE

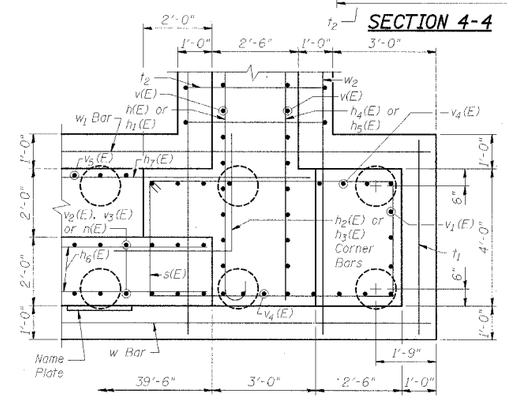

DETAIL A

WEST ABUTMENT DETAILS
SECTION 98-20101-00-BR
STA. 13+70, S.N. 006-4288
T.R. 245 OVER BIG BUREAU CREEK
BUREAU COUNTY

WHA # 1104D04