ROUTE NO.	SECTION	COUNTY	TOTAL SHEETS	SHEET NO.
C.H. 20	04-00153 -00-BR	STARK	13	8
	ILLINOIS			

CONTRACT NO. 89364

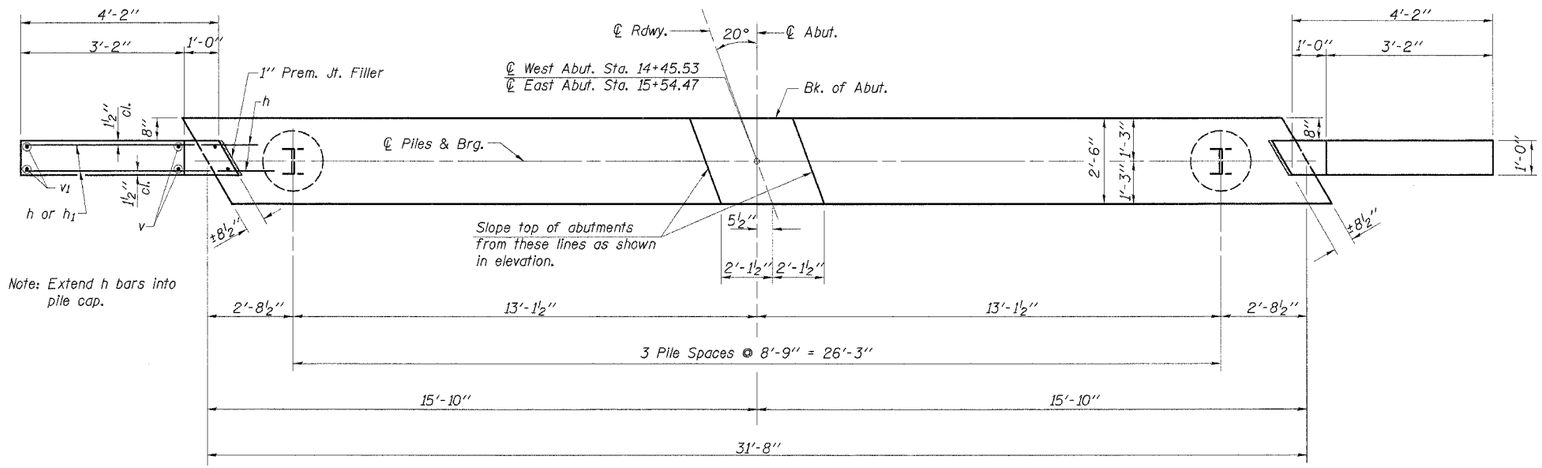

PLAN

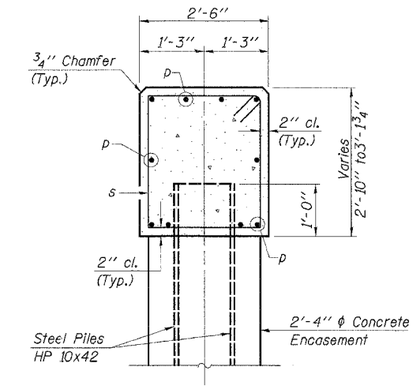

SECTION A-A

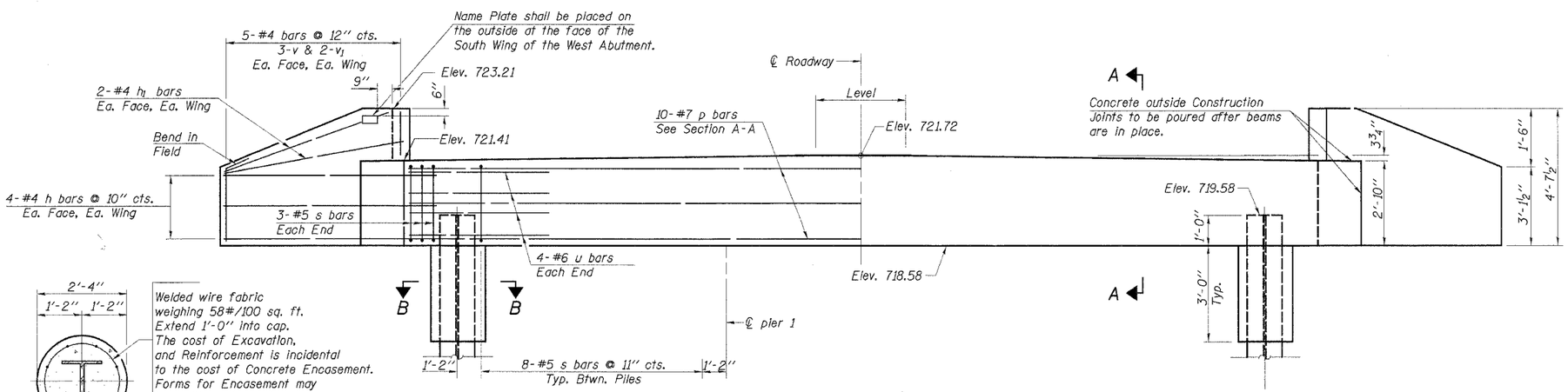

ELEVATION

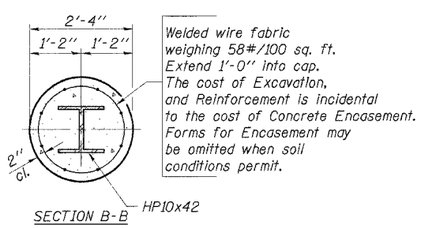

SECTION B-B

PILE ENCASEMENT DETAIL

2 ABUTMENTS BILL OF MATERIAL

Bar	No.	Size	Length	Shape
h	32	#4	5'-6"	
h_1	16	#4	3'-10"	
p	20	#7	31'-4"	
s	60	#5	10'-3"	
u	16	#6	12'-3"	
v	24	#4	3'-5"	
v_1	16	#4	4'-4"	
Concrete Structures			Cu. Yd.	20.0
Reinforcement Bars			Pound	2480
Name Plates			Each	1
Test Pile Steel HP 10x42			Each	1
Steel Piles HP 10x42			Foot	364
Concrete Encasement			Cu. Yd.	3.8

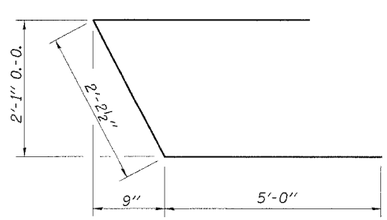

BAR u

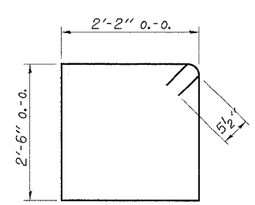

BAR s

PILE DATA

Type ..... Steel Piles HP 10x42
No. Req'd. (2 Abuts.) 8*
Design Capacity ..... 40 Tons/Pile
Drive Piles To ..... 60 Tons
Drive Test Pile To ..... 84 Tons
Est. Length ..... 52 Feet/Pile

*Includes 1 Test Pile to be driven in a permanent location at the West Abutment.

DESIGNED	SFM
CHECKED	FJS
DRAWN	SAP & JPS
CHECKED	SFM

ABUTMENTS

COUNTY HIGHWAY 20
SECTION 04-00153-00-BR
STARK COUNTY
STATION 15+00

4440 ASH GROVE
SPRINGFIELD, IL 62711
(217) 793-8600
oasinc@famvid.com

OZYURT AND STONE, INC.
CONSULTING ENGINEERS

JOB NO.: 0414
FILE: ABUT.DGN
DATE: 08/12/05