CONTRACT NO. 60997

F.A. RTE.	SECTION	COUNTY	TOTAL SHEETS	SHEET NO.
337	19R-1	LAKE	800	368
STA. 21+423.511		TO STA. 21+700		
FED. ROAD DIST. NO.		ILLINOIS	FED. AID PROJECT	

0 25 50
HORIZONTAL SCALE IN METERS
0 1 2 2.5 5
VERTICAL SCALE IN METERS

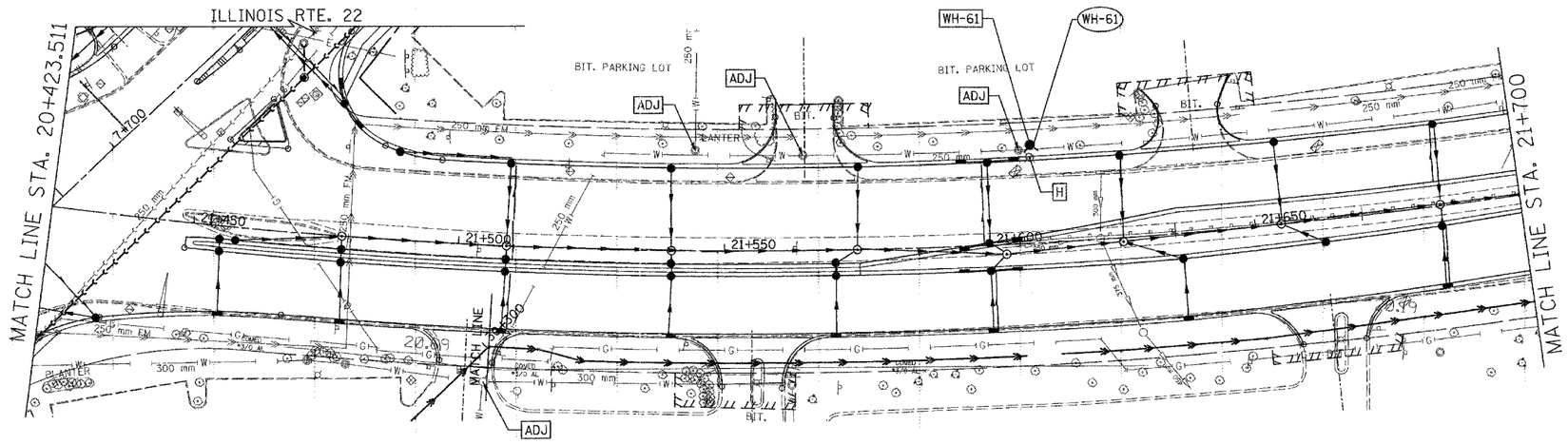

LEGEND

- H FIRE HYDRANT TO BE MOVED
- ADJ STRUCTURE TO BE ADJUSTED
- F STRUCTURE TO BE FILLED
- R STRUCTURE TO BE REMOVED
- REC STRUCTURE TO BE RECONSTRUCTED
- PIPE ABANDONMENT (OR REMOVAL WHERE REQ'D)

STRUCTURE/ HYDRANT/ FITTING

PIPE

WH-61
NEW FIRE HYDRANT LOCATION STA. 21+608.3, 18.5 m LT

WH-61
1.0 m - 150 mm DUCT. IRON WATER MAIN

PROPOSED U.S. ROUTE 12 (RAND ROAD)

21+675 21+700

FINAL SURVEY	BY	DATE
SURVEYED		
PLOTTED		
NOTE BOOK TEMPLATE		
AREAS		
AREAS CHECKED		
NO.		

ORIGINAL SURVEY	BY	DATE
SURVEYED		
PLOTTED		
NOTE BOOK TEMPLATE		
AREAS		
AREAS CHECKED		
NO.		

REVISIONS

NAME	DATE

ILLINOIS DEPARTMENT OF TRANSPORTATION
ILLINOIS ROUTE 22
FROM US RTE 12 TO BEUSCHING RD
US ROUTE 12
WATER MAIN RELOCATION
STA. 21+423.511 TO STA. 21+700

DRAWN BY MAY
DATE 08/19/04 CHECKED BY RJS

...\dgn\00\west\di_us 12-9-MAY.dgn 08/19/2004 12:35:12 PM