SECTION	COUNTY	TOTAL SHEETS	SHEET NO.
2003-031I	COOK	976	918

STA. TO STA.

FED. ROAD DIST. NO. _ ILLINOIS FED. AID PROJECT

62583

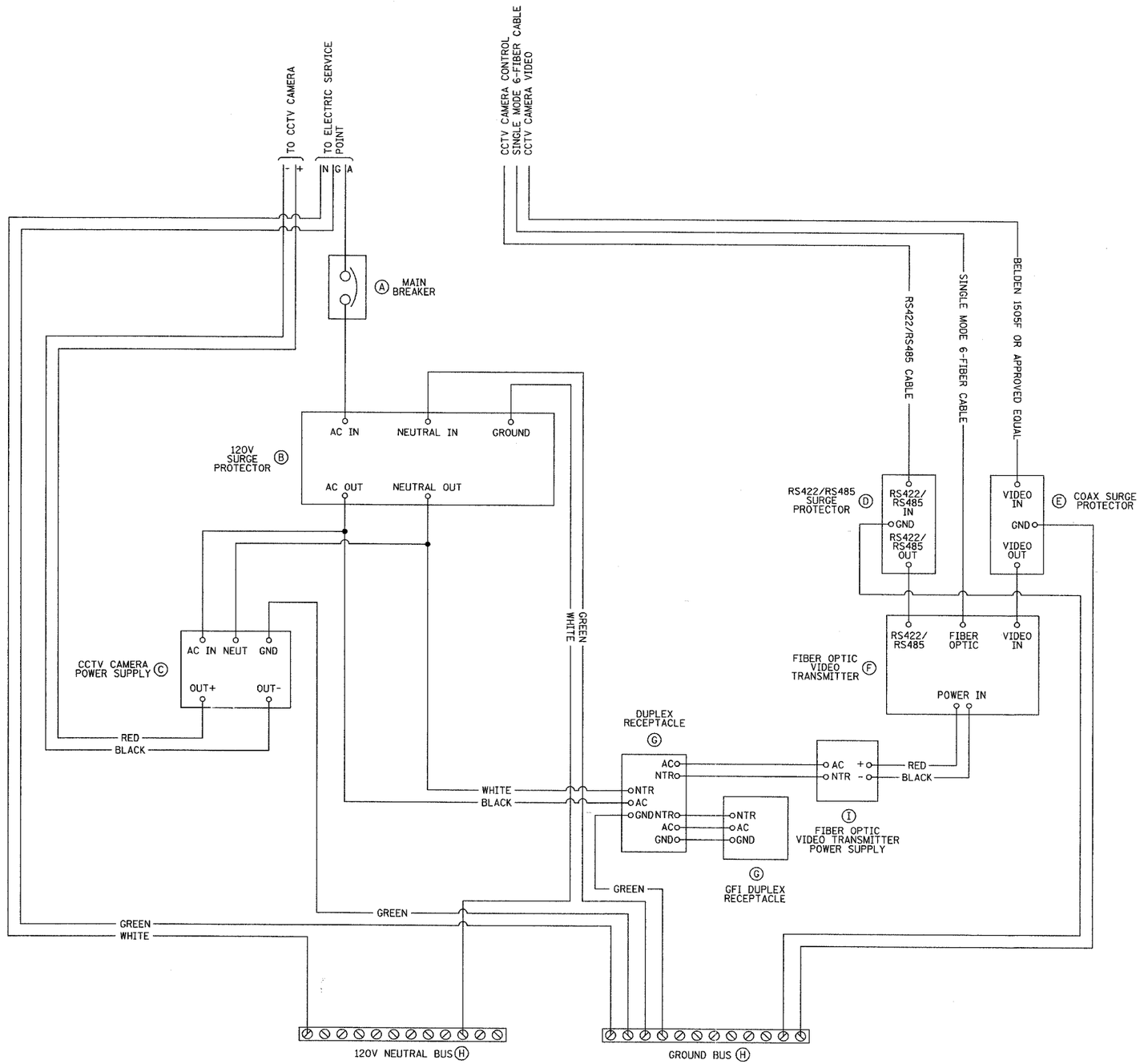

ITEM NO.	QTY	DESCRIPTION
A	1	MAIN CIRCUIT BREAKER 2 POLE 15 AMP
B	1	120 VAC FILTERING SURGE PROTECTOR
C	1	24 VAC CCTV CAMERA POWER SUPPLY
D	1	RS422/RS485 SURGE PROTECTOR
E	1	VIDEO COAX CABLE SURGE PROTECTOR
F	1	FIBER OPTIC VIDEO TRANSMITTER
G	1	QUAD OUTLET WITH ONE GFI DUPLEX RECEPTACLE AND ONE NON-GFI DUPLEX RECEPTACLE
H	2	COPPER GROUND AND NEUTRAL BUS
I	1	12 VDC FIBER OPTIC VIDEO TRANSMITTER POWER SUPPLY

DT-14

Edwards AND Kelcey
ONE NORTH FRANKLIN
CHICAGO, IL 60606
PHONE: (312) 251-3000
FAX: (312) 251-3015
WEB: WWW.EKCORP.COM

REVISIONS	
NAME	DATE

ILLINOIS DEPARTMENT OF TRANSPORTATION

F.A.I. 94/90 (DAN RYAN EXPRESSWAY)

31st STREET to I-57

CLOSED CIRCUIT TELEVISION
CABINET COMMUNICATIONS
AND WIRING DIAGRAMS
(SHEET 2 OF 2)

SCALE: NOT TO SCALE DRAWN BY: DHI

DATE: October 29, 2004 CHECKED BY: JEZ

p:\03009\035\tes\cadd\dt020142s.stl

10/14/2004 09:24:09 AM