CONTRACT 62B29	F. A. RTE.	SECTION	COUNTY	TOTAL SHEETS	SHEET NO
	305	2004-088B	COOK	145	129
STA.		TO STA.			
FED. ROAD DIST. NO.		ILLINOIS	FED. AID PROJECT		

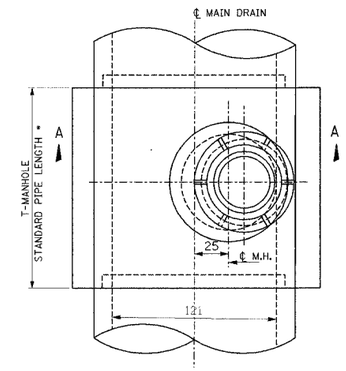

PLAN OF T-MANHOLE

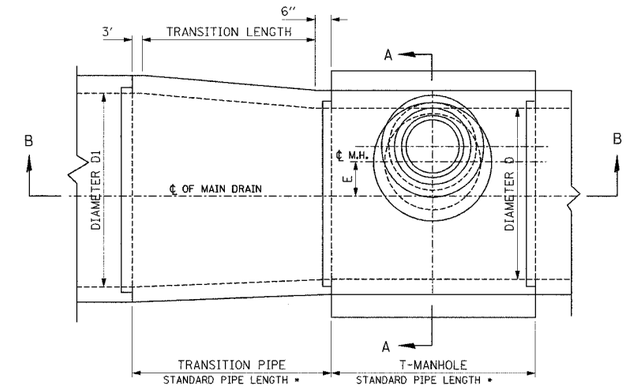

PLAN OF T-MANHOLE AND TRANSITION PIPE

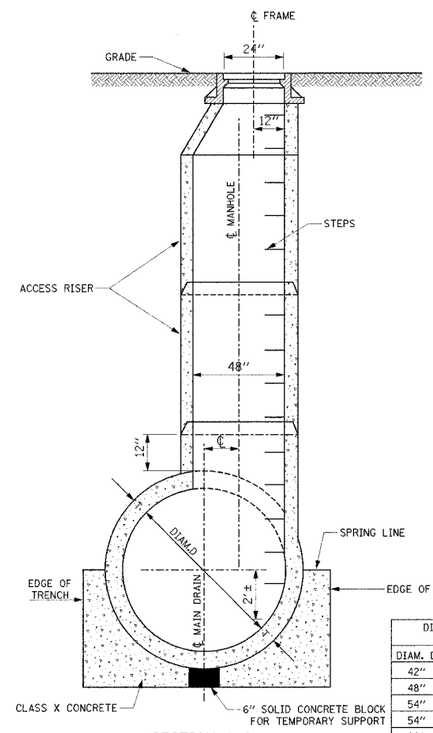

SECTION A-A

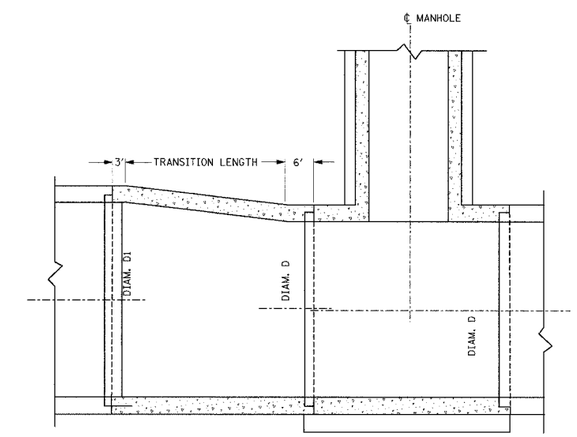

SECTION B-B

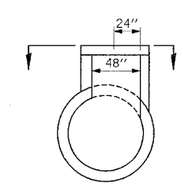

FLAT SLAB DETAIL

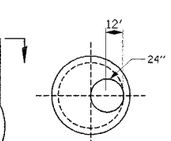

SECTION C-C

FLAT SLAB SHALL CONFORM TO A.S.T.M. DESIGNATION C-478

DIMENSIONS FOR T-MANHOLE			DIMENSIONS FOR TRANSITION PIPE		
DIAM. D	MIN. T	E	DIAM. D	DIAM. D	MIN. T
42″	4″	0″	48″	42″	4″
48″	4½″	3″	54″	48″	4½″
54″	5″	6″	60″	54″	5″
54″	5½″	9″	66″	54″	5½″
60″	6″	12″	66″	60″	5½″
66″	6½″	15″	72″	66″	6″
72″	7″	318″	78″	72″	6½″
78″	7½″	21″	84″	78″	7″
84″	8″	24″	90″	84″	7½″
90″	9″	30″	96″	90″	8″

NOTES:
T-MANHOLE MAY BE SEPARATE OR IN COMBINATION WITH TRANSITION PIPE AS SHOWN ON THE PLANS.
FOR DETAILS OF 48 INCH DIAMETER ACCESS RISER SEE (MANHOLES TYPE A) STATE STANDARD 602401.
SEE PLAN AND PROFILE SHEETS FOR LOCATION AND INVERTS OF PRECAST T-MANHOLE AND TRANSITION PIPE.
* 5′ LENGTH USED FOR ESTIMATION PURPOSES.

REVISIONS	
NAME	DATE

DDT-1

ILLINOIS DEPARTMENT OF TRANSPORTATION

DRAINAGE DETAIL
PRECAST T-MANHOLE
AND
PRECAST TRANSITION PIPE

SCALE: NONE
DATE JANUARY 2005

DRAWN BY
CHECKED BY

p:\00009\0\14-cadd\Advance Contracts\precast-1.dgn 02:42:35 PM