STATE OF ILLINOIS
DEPARTMENT OF TRANSPORTATION

ROUTE NO.	SECTION	COUNTY	TOTAL SHEETS	SHEET NO.
FAP 305	*	Cook	193	144

SHEET NO. 15
37 SHEETS

Contract No. 62878 *1313.1 B

Joint Size	"C" at 50°F	"D" at 50°F
2''	2''	1½'' Min.
2½''	2½''	1¾'' Min.
4''	3''	2½'' Min.

INSTALLATION NOTES

1. Install continuous seal in roadway, parapet, curb, and sidewalk.
2. Install anchor blocks as indicated.

NOTE A: Maximum spacing of anchor bolts shall be 12'' centers.

SKEW LIMITATIONS

The details of the anchor blocks and the elastomeric membrane in the parapet, as shown, are for up to 50° skews.

For skews greater than 50°, the anchor blocks and the elastomeric membrane, installed according to dimension "D", might require modifications to insure a minimum clearance of 1½'' from centerline of anchor studs to edge of parapet opening. The anchor blocks and the elastomeric membrane shall also be installed to the top of the parapet with the anchor studs spaced at ±12'' cts.

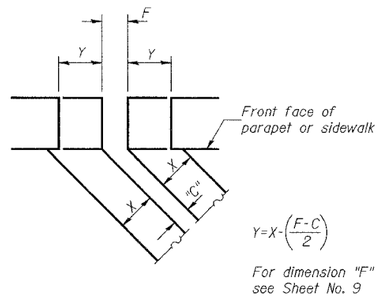

FORMING BLOCKOUT SKETCH

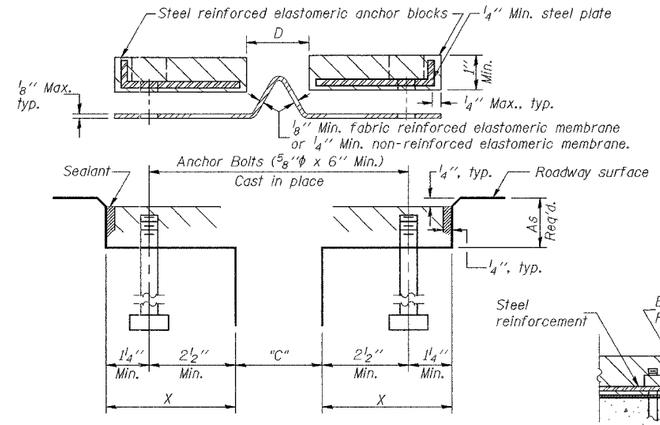

CROSS SECTION

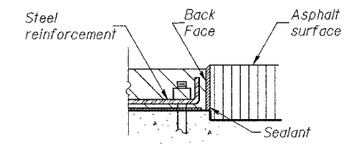

ANCHOR BLOCK WITH ASPHALT SURFACE

GENERAL NOTES

Continuous Seal Neoprene Expansion Joint shall consist of molded anchor blocks of elastomer and steel, field assembled over continuous lengths of elastomeric membrane.

The elastomeric membrane shall be premolded with a single or a double upward convolution that will have a "memory" to return to its molded position upon joint closure.

The convolution length shall be such that the extended length will not be greater than the manufactured length when the joint is fully expanded in its design range and will not protrude above the anchor blocks when the joint is fully compressed.

Joint openings shall be adjusted according to Article 503.10(c) of the Standard Specifications when the deck is poured at an ambient temperature other than 50° F.

The parapet and roadway membrane shall be made continuous by an approved vulcanizing process. Lapping will not be permitted.

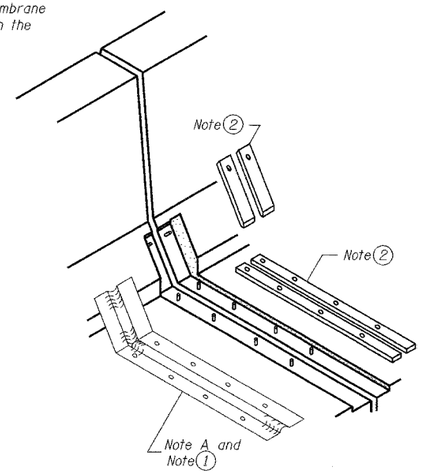

AT PARAPET

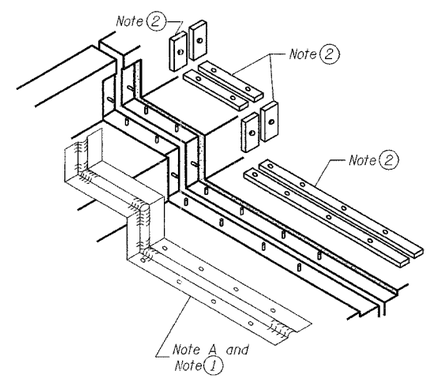

AT SIDEWALK OR MEDIAN

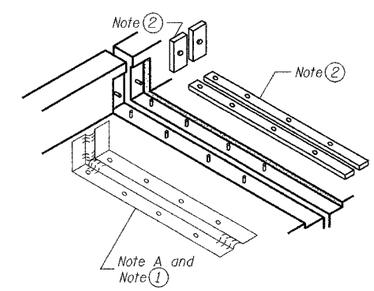

AT WALL

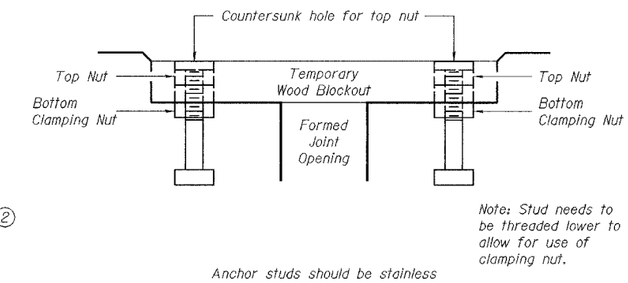

RECOMMENDED BLOCKOUT DETAIL

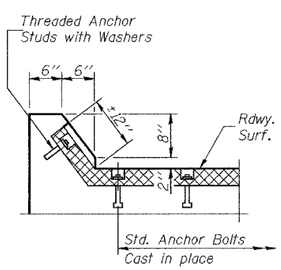

AT CURB

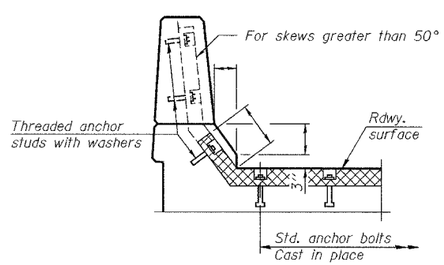

AT PARAPET

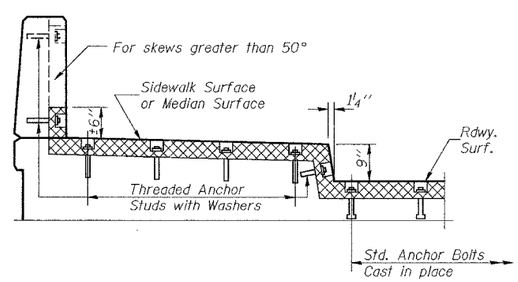

AT SIDEWALK OR MEDIAN

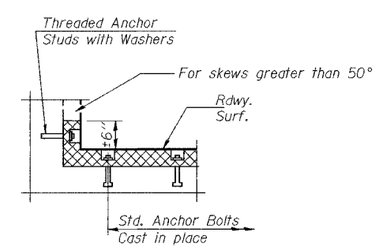

AT WALL

TYPICAL END TREATMENTS

DESIGNED	MJW
CHECKED	GAT
DRAWN	MJW
CHECKED	GAT

EJ-CS 9-01-03

AMERICAN CONSULTING ENGINEERS
CONSULTING ENGINEERS & PLANNERS
CHICAGO, ILLINOIS

NEOPRENE EXPANSION JOINT
PALATINE ROAD OVER
IL. RT. 83 (ELMHURST ROAD)
F.A.P. RTE. 305 SECT. 1313.1 B
COOK COUNTY
STATION 363+77.17
STRUCTURE NO. 016-2812