STATE OF ILLINOIS
DEPARTMENT OF TRANSPORTATION

ROUTE NO.	SECTION	COUNTY	TOTAL SHEETS	SHEET NO.
FAS 1197	105BR-2	WHITESIDE	59	22
FED.ROAD DIST.NO.		ILLINOIS	PROJECT	

Sheet No. 7 of 11 Sheets

CONTRACT 64421

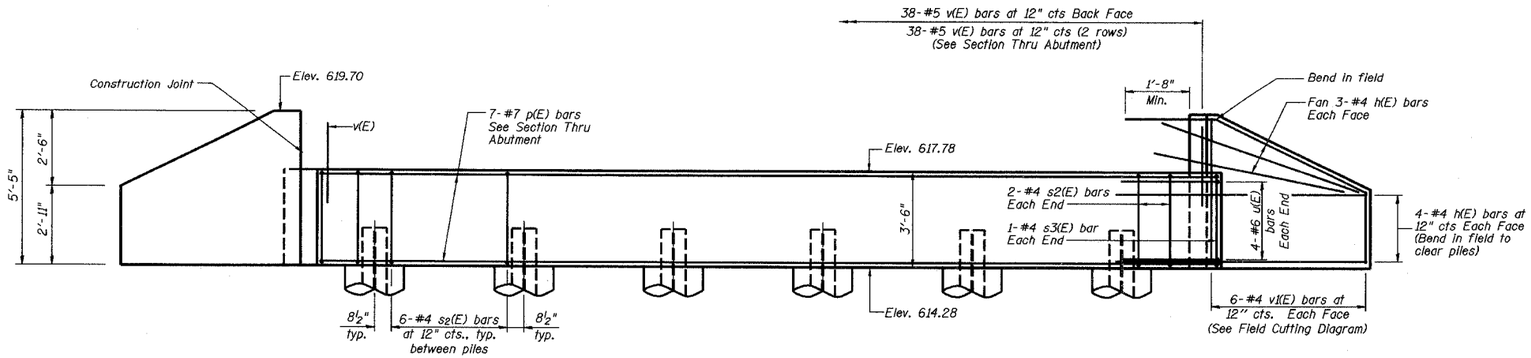

ELEVATION
(Looking West)

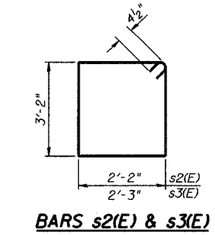

BARS s2(E) & s3(E)

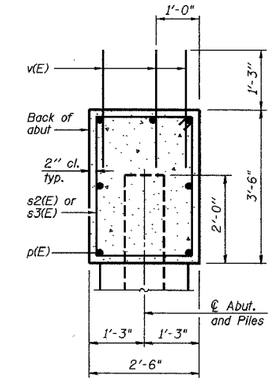

SECTION THRU ABUTMENT

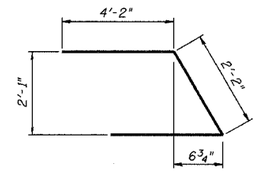

BAR u(E)

PILE DATA

Type: HP12x63
Capacity: Driven to refusal
Est. Length: 47'
No. Required: 5 plus 1 test pile

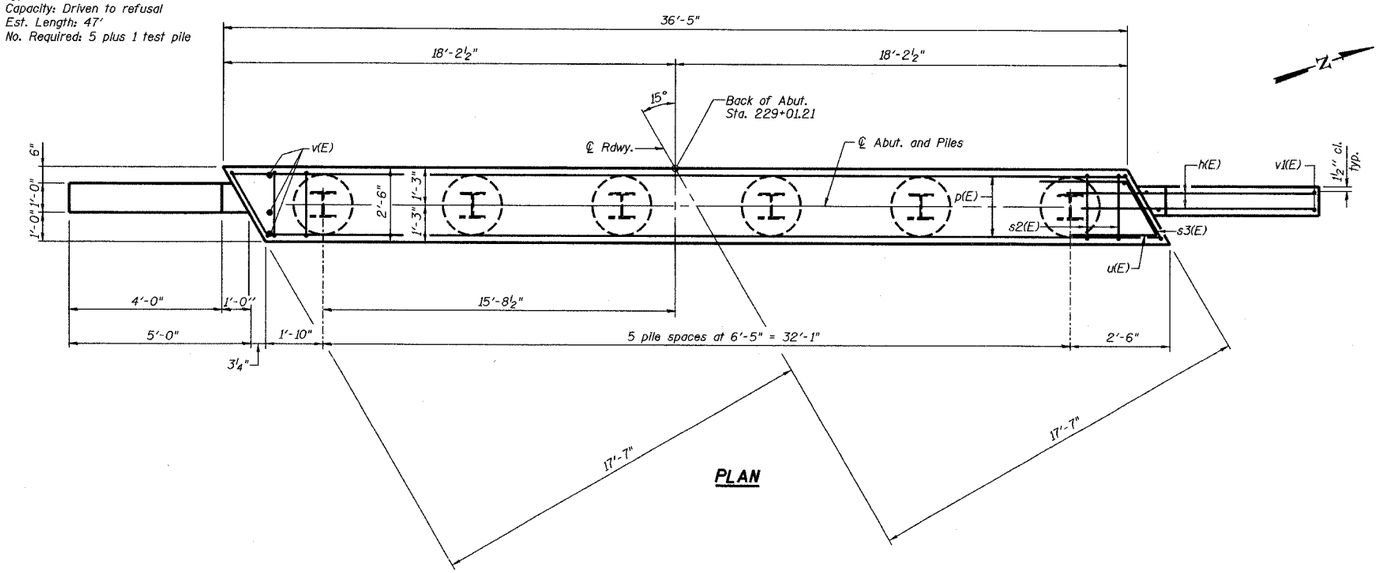

PLAN

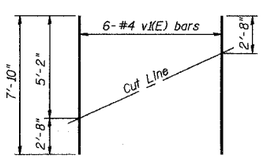

FIELD CUTTING DIAGRAM

Order v1(E) full length. Cut as shown and use remainder of bars in opposite face.

BILL OF MATERIAL

Bar	No.	Size	Length	Shape
h(E)	28	#4	7'-3"	
p(E)	7	#7	36'-1"	
s2(E)	34	#4	11'-5"	
s3(E)	2	#4	11'-7"	
u(E)	8	#6	10'-6"	
v(E)	114	#5	3'-5"	
v1(E)	12	#4	7'-10"	
Structure Excavation		Cu. Yd.	35	
Concrete Structures		Cu. Yd.	13.4	
Reinforcement Bars, Epoxy Coated		Pound	1520	
Furnishing Steel Piles HP12x63		Foot	235	
Driving Steel Piles		Foot	235	
Test Pile Steel HP12x63		Each	1	

Reinforcement bars designated (E) shall be epoxy coated.

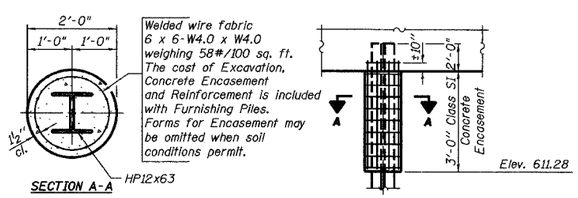

PILE ENCASEMENT DETAIL

WEST ABUTMENT DETAILS

REVISIONS		
No.	DATE	INITIALS
1		
2		
3		
4		
5		
6		
7		
8		
9		
10		
11		
12		

MOLINE ROAD OVER UNNAMED TRIBUTARY TO ROCK RIVER

FAS ROUTE 1197 SECTION 105BR-2
SN 098-0110
STA 229+67.50 WHITESIDE COUNTY

HOMER L. CHASTAIN & ASSOCIATES, LLP
CONSULTING ENGINEERS
184-001397

DRAWN BY	R King	DATE 8/04
CHECKED BY	CMV	DATE 8/04
QA/QC BY	CWC	DATE 8/04
BOOK NUMBER		
PROJECT No.	4858-3	
SHEET No.		

\CADD_Structural\westabut.dgn 11/08/2004 08:22:00 AM