CONTRACT NO. 64647

F.A.P. RTE.	SECTION	COUNTY	TOTAL SHEETS	SHEET NO.
595	1-3-K	ROCKISLAND	476	239D
STA.		TO STA.		
FED. ROAD DIST. NO.	ILLINOIS	FED. AID PROJECT		

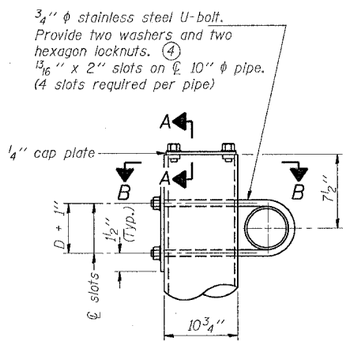

DETAIL A

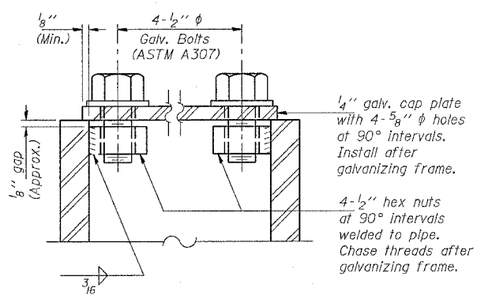

SECTION A-A

As an alternate to bolts, may use galvanized drive-fit caps installed after galvanizing frame.

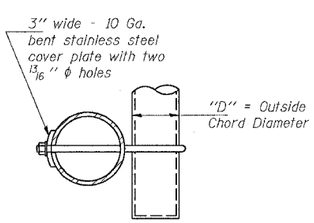

SECTION B-B

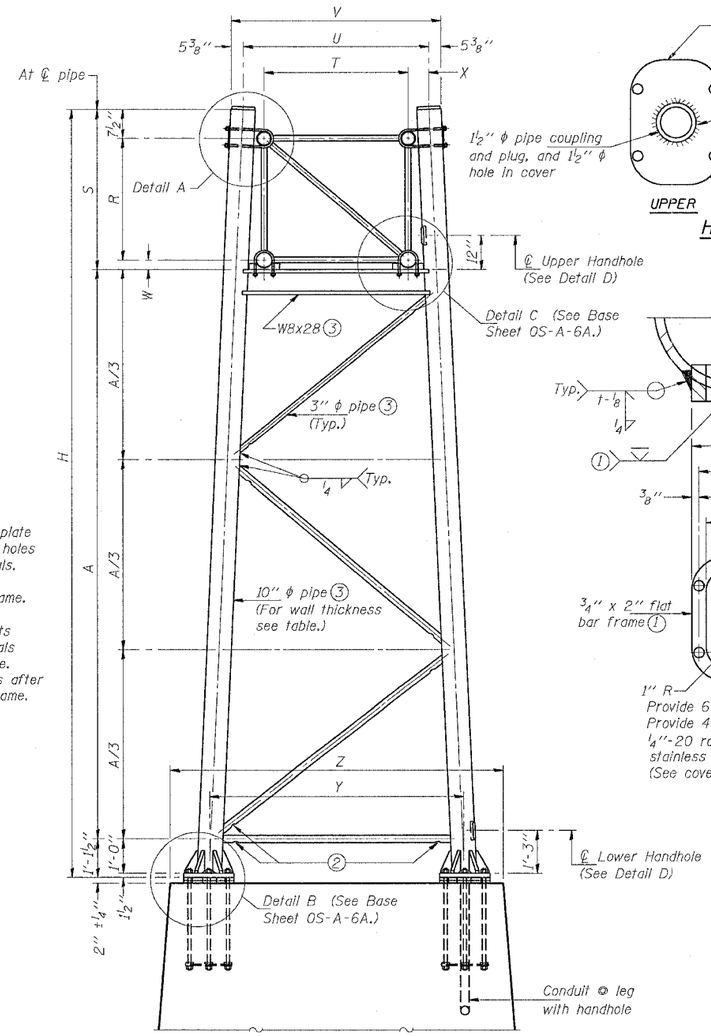

FOR FOUNDATION DETAILS SEE BASE SHEET OS-F3 (Spread Footing) or OS4-F3 (Drilled Shaft).

SIDE ELEVATION

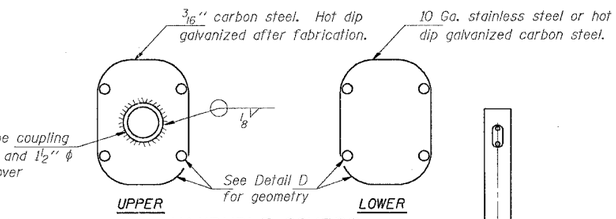

HANDHOLE COVERS

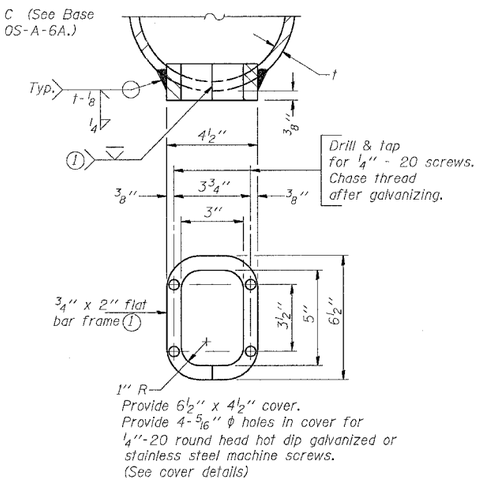

DETAIL D

END ELEVATION

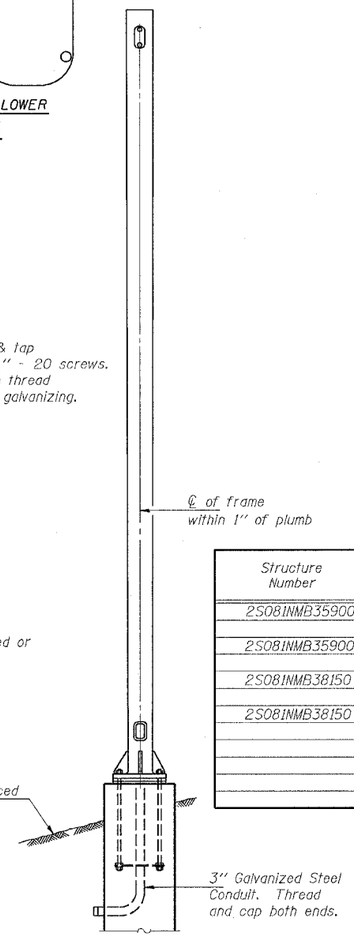

Support Design Loads: See Base Sheet OS-A-1 for design and loading criteria.
Load combinations checked include deadload plus:
a) 100% wind normal to sign, 20% parallel to sign
b) 60% wind normal to sign, 30% parallel to sign

(1) In lieu of fabricated handhole frame as shown, may cut from 2" plate (rolling direction vertical). All cut faces to be ground to ANSI Roughness of 500 $\sqrt{in}$ or less.
(2) Galvanizing vent holes of adequate size shall be provided on underside at each end of bracing pipes. Alternately, holes may be provided in wall of pipe column. All vent holes shall be drilled and de-burred. (Typ.)
(3) Steel pipe, plate, carbon steel handhole covers and rolled sections shall be hot dip galvanized after fabrication. Painting is not permitted. See Base Sheet OS-A-1.
(4) See General Notes for fasteners.
(5) Dimensions shown are based on selection criteria in the Sign Structures Manual. Nonstandard applications must have dimensions verified or amended as appropriate.

Structure Number	Station	Support Left	Support Right	Truss Type	Pipe Wall Thickness	H	A
2S081NMB35900	359+00	X		II-A	.365	26' 4 1/2"	18' 11 3/4"
2S081NMB35900	359+00		X	II-A	.365	26' 6"	19' 1 1/4"
2S081NMB38150	381+50	X		II-A	.365	23' 11 1/4"	16' 6 1/2"
2S081NMB38150	381+50		X	II-A	.365	27' 1 3/4"	9' 9"

10" ϕ PIPE TRUSS SUPPORT FRAME

Truss Type	Dimensions R	S	T	U	V	W	X	Y	Z
I-A	4'-6"	5'-5 1/2"	4'-0"	5'-6"	6'-4 3/4"	4"	9"	8'-3"	10'-9"
II-A (5)	5'-3"	6'-3 1/4"	4'-6"	6'-1"	6'-11 3/4"	4 3/4"	9 1/2"	8'-3"	10'-9"

NUMBER	REVISION	DATE

OVERHEAD SIGN STRUCTURES
SUPPORT FRAME for ALUMINUM TRUSS

REVISIONS NAME	DATE

ILLINOIS DEPARTMENT OF TRANSPORTATION

SCALE: VERT. HORIZ.
DATE
DRAWN BY
CHECKED BY

OS-A-6 11/1/2002

PLOT DATE = Wed Jan 26 07:23:16 2005
FILE NAME = c:\pw-pw:ia\bai1ea\sign sheets.dgn
PLOT SCALE = 28.0000 ' / IN.
REFERENCE = REF