F.A.U. RTE.	SECTION	COUNTY	TOTAL SHEETS	SHEET NO.
6108	***	LA SALLE	679	267
STA.		TO STA.		
FED. ROAD DIST. NO.	ILLINOIS	FED. AID PROJECT		

*** (70X,71X)RS-1, (71X-VBR)DM
CONTRACT NO. 66225

DESIGN		
INT.	DATE	REASON

PLOTS & CHECKS			
INT.	DATE	NO.	REASON

CHECKS		
INT.	DATE	REASON

N

0 1 2
SCALE IN FEET

NOTES:

HATCHED AREAS INDICATE CONCRETE REMOVAL ACCORDING TO SECTION 501.03 OF THE STANDARD SPECIFICATIONS.

EXISTING REINFORCEMENT EXTENDING INTO REMOVED AREAS SHALL BE CLEANED, STRAIGHTENED AND INCORPORATED INTO NEW CONSTRUCTION.

REINFORCEMENT BARS SHALL CONFORM TO THE REQUIREMENTS OF AASHTO M31 OR M322 GRADE 60.

COST OF MODIFYING THE EXISTING DRAINAGE STRUCTURE SHALL BE INCLUDED IN THE COST OF "STORM SEWERS, TYPE 1 REINFORCED CONCRETE ELLIPTICAL PIPE, SPAN 23, RISE 14".

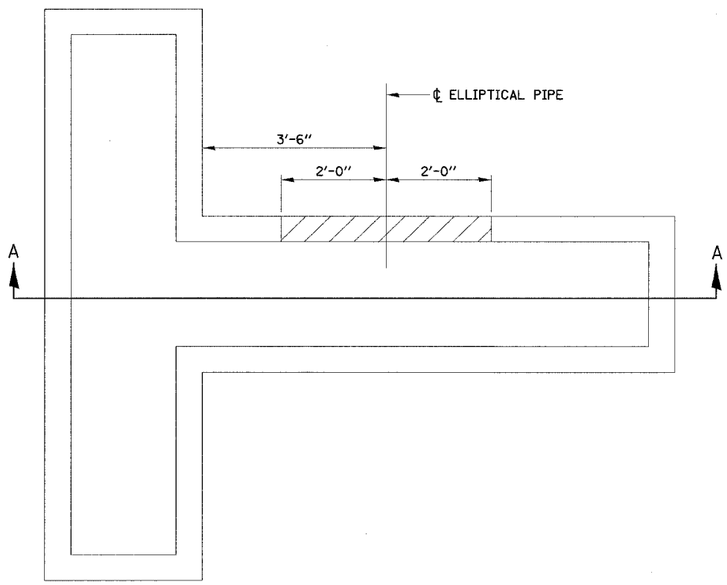

PLAN VIEW

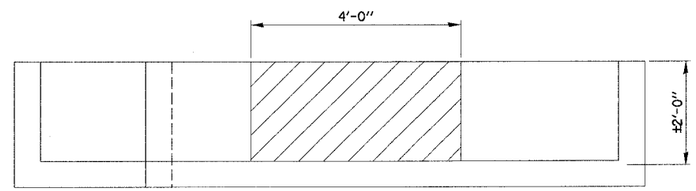

SECTION A-A
(SHOWING REMOVAL)

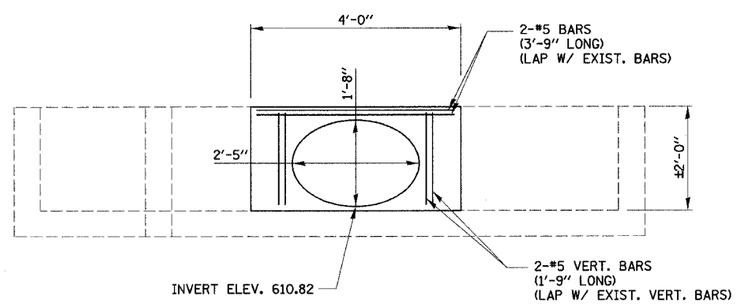

SECTION A-A
(SHOWING REPLACED CONCRETE)

REVISIONS	
NAME	DATE

ILLINOIS DEPARTMENT OF TRANSPORTATION

DRAINAGE STRUCTURE REPAIR DETAILS - LINCOLN AVENUE

FAU 6108 (IL RTE. 351)
SEC. (70X,71X)RS-1, (71X-VBR)DM
LA SALLE COUNTY

SCALE: VERT. HORIZ.
DATE 4/23/04

DRAWN BY: LANDREY
DESIGNED BY: SANFORD
CHECKED BY: COLBROOK

GREENE & BRADFORD, INC.
(OF SPRINGFIELD)
CONSULTING ENGINEERS
RAILROAD STATION DRIVE
SPRINGFIELD, ILLINOIS 62704
PROFESSIONAL DESIGN FIRM - 184-001672
PROFESSIONAL & STRUCTURAL ENGINEERING CORPORATION
(217) 753-8844, (217) 753-8207 (F), E-MAIL: COMP@GANDBOFSPRINGFIELD.COM

COMPUTER FILE NO. 01194DS_RPR
PROJECT 01194_B_S
4/23/04 - MML

IDOTPL-1 1"=1' 8/07/00

\south bare\01194ds_rpr\.dgn 12/2/2004 8:15:20 PM User = gregj