F.A.U. RTE.	SECTION	COUNTY	TOTAL SHEETS	SHEET NO.
6108	***	LA SALLE	679	299
STA.		TO STA.		
FED. ROAD DIST. NO.	ILLINOIS	FED. AID PROJECT		

*** (70X,71X)RS-1, (71X-VBR)DM
CONTRACT NO. 66225

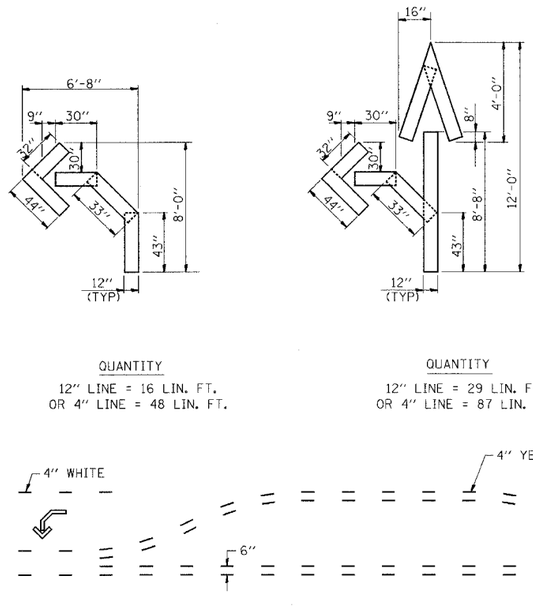

QUANTITY
12" LINE = 16 LIN. FT.
OR 4" LINE = 48 LIN. FT.

QUANTITY
12" LINE = 29 LIN. FT.
OR 4" LINE = 87 LIN. FT.

703–1

SHORT-TERM PAVEMENT MARKING FOR MEDIANS AND ARROWS

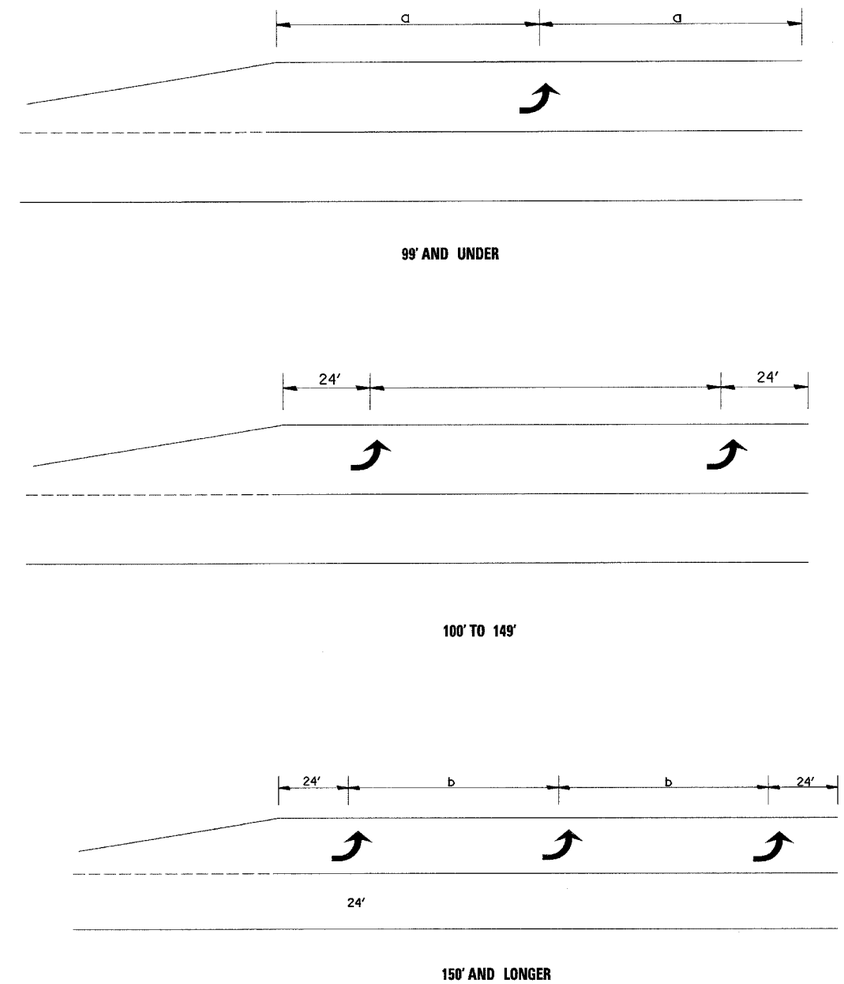

99' AND UNDER

100' TO 149'

150' AND LONGER

TYPICAL PLACEMENT OF ARROWS IN TURN LANES

780–10

DESIGN		
INT.	DATE	REASON

PLOTS & CHECKS			
INT.	DATE	NO.	REASON

FILE NAME = $FILE$
PLOT SCALE = $pltscale$ DRV = $PLOTTER$
PLOT DATE = $DATE$
PLOT TIME = $TIME$
OPERATOR = $USER$

CHECKS		
INT.	DATE	REASON

REVISIONS	
NAME	DATE

ILLINOIS DEPARTMENT OF TRANSPORTATION

DETAILS

FAU 6108 (IL. RTE. 351)
SECTION (70X, 71X)RS-1, (71X-VBR)DM
LASALLE COUNTY

SCALE: VERT. HORIZ.
DATE: 06/06/03

DRAWN BY: MABUS
DESIGNED BY: BOTT
CHECKED BY: COLBROOK

GREENE & BRADFORD, INC. OF SPRINGFIELD

COMPUTER FILE NO. STANDARDS-13
PROJECT: 01194_B_S
03/03/04-RPB

IDOTPL-50 1"=50' 11/18/03

FAU RTE. 6108 (IL RTE. 351) LASALLE CO.