FAP ROUTE	SECTION	COUNTY	TOTAL SHEETS	SHEET NO
586	60R-2, 37R-1	MADISON	502	230
STA.	TO STA.			
CONTRACT NO: 76301				

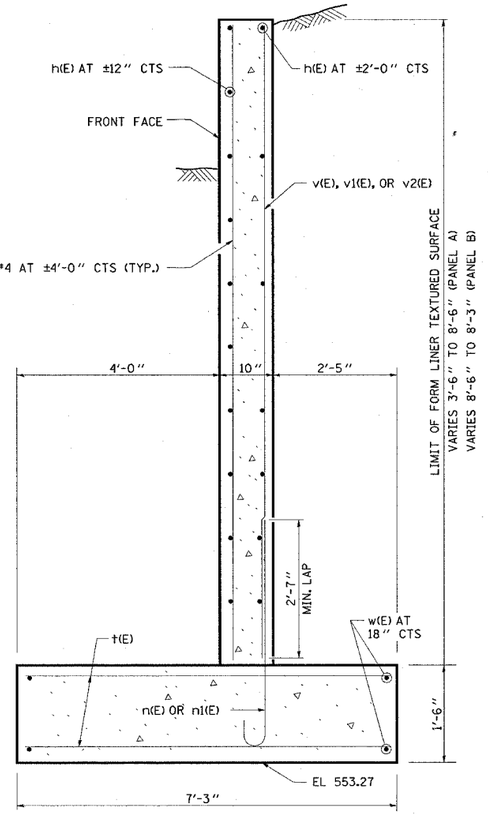

SECTION A-A

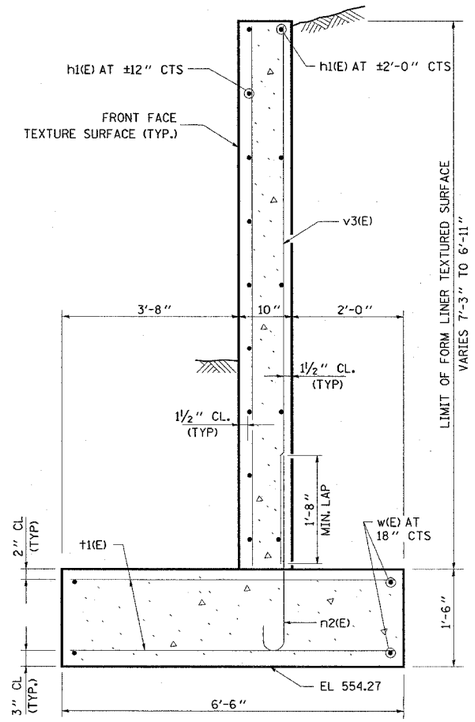

SECTION B-B

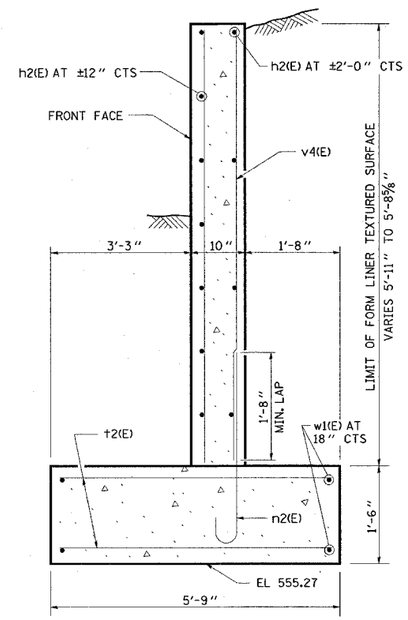

SECTION C-C

BILL OF MATERIAL

BAR	NO.	SIZE	LENGTH (FT)	SHAPE
h(E)	28	#4	24'-6"	
h1(E)	13	#4	26'-8"	
h2(E)	10	#4	16'-8"	
n(E)	12	#6	5'-0"	
n1(E)	12	#6	7'-0"	
n2(E)	53	#4	4'-0"	
t(E)	148	#4	6'-11"	
t1(E)	60	#4	6'-2"	
t2(E)	28	#4	5'-5"	
v(E)	6	#4	8'-7"	
v1(E)	12	#4	5'-6"	
v2(E)	39	#4	7'-10"	
v3(E)	40	#4	6'-6"	
v4(E)	23	#4	5'-4"	
w(E)	15	#4	24'-8"	
w1(E)	4	#4	14'-8"	
REINFORCEMENT BARS, EPOXY COATED			POUNDS	3016
PIPE DRAIN			FT	90
CONCRETE STRUCTURES			CU. YD.	53.2
FORMED LINER TEXT SURFACE			SQ. FT.	624

REINFORCEMENT BARS DESIGNATED (E) SHALL BE EPOXY COATED.

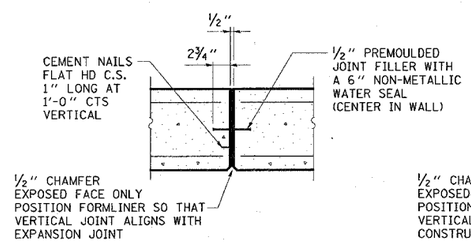

EXPANSION JOINT DETAIL

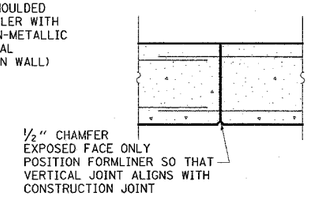

CONSTRUCTION JOINT DETAIL

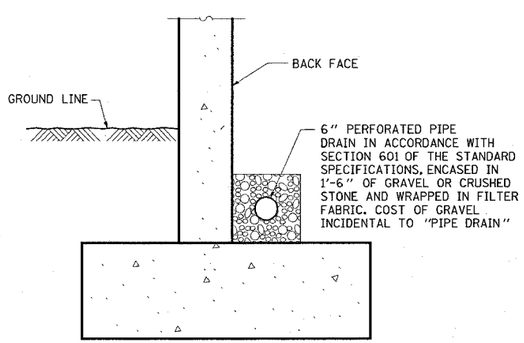

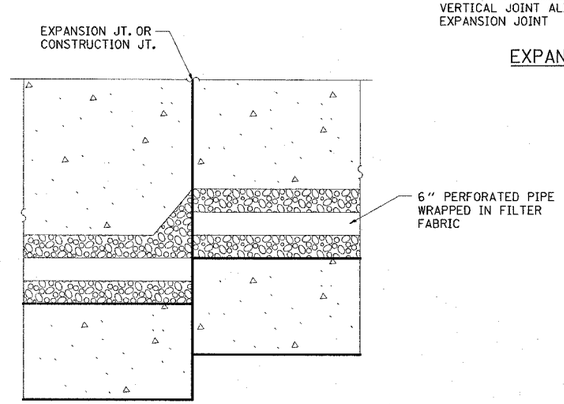

WALL DRAINAGE DETAILS

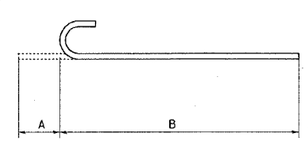

	A	B
n(E)	8"	4'-4"
n1(E)	8"	6'-4"
n2(E)	6"	3'-6"

50' 0 50' 100'
SCALE: 1" = 50'

ILLINOIS DEPARTMENT OF TRANSPORTATION

RETAINING WALL DETAILS

FAP ROUTE 586
SECTION 60R-2, 37R-1
MADISON COUNTY

DRAWN BY:

REVISIONS	
NAME	DATE

PLOT DATE: Friday July 02, 2004 @ 8:08:24 AM

PLAN
NOTE BOOK NO.
SURVEYED
PLOTTED
ALIGNMENT CHECKED
RT. OF WAY CHECKED
CADD FILE NAME
BY
DATE

1/1/2004
Friday July 02, 2004 @ 8:08:24 AM
c:\pw_work\mid69999\plan\plh0805e.dgn
LV41-G3