FAP ROUTE	SECTION	COUNTY	TOTAL SHEETS	SHEET NO
586	60R-2, 37R-1	MADISON	502	248
STA.		TO STA.		
CONTRACT NO. : 76301				

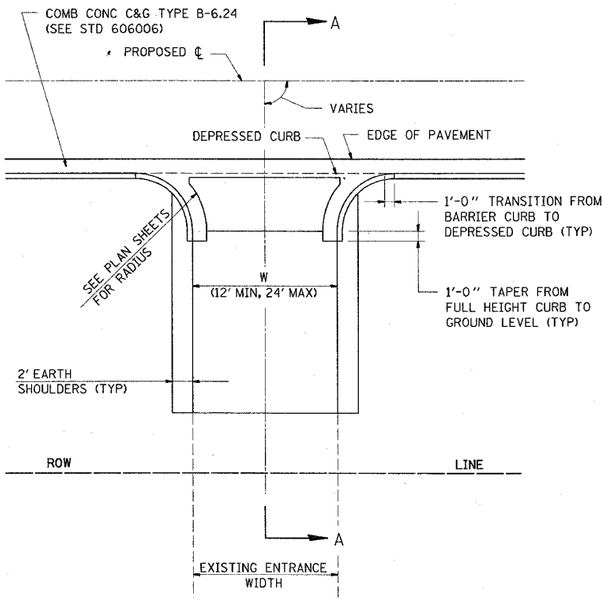

PE DETAIL A

PRIVATE ENTRANCE ADJACENT TO ROADWAY PAVEMENT WITH CONCRETE CURB & GUTTER TYPE B-6.24

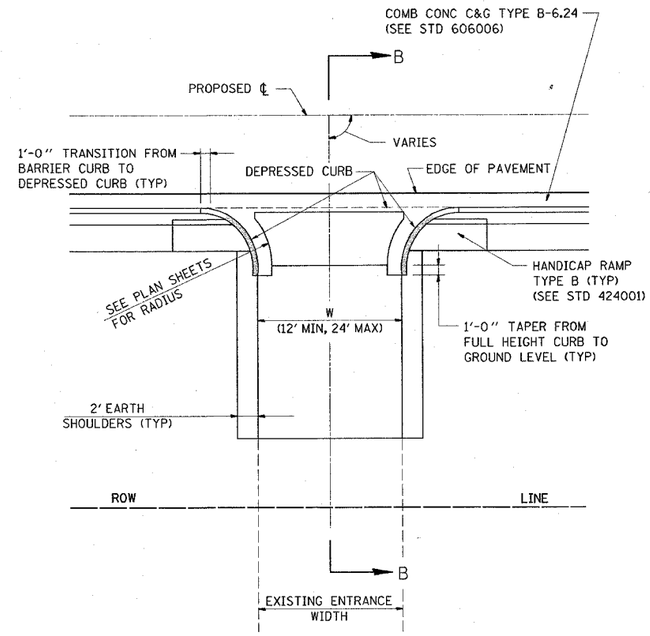

PE DETAIL B

PRIVATE ENTRANCE WITH PCC SIDEWALK ADJACENT TO ROADWAY PAVEMENT WITH CONCRETE CURB & GUTTER TYPE B-6.24

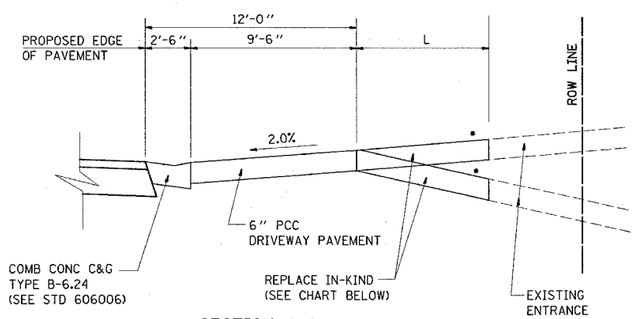

SECTION A-A

* SEE CROSS SECTIONS FOR SLOPE
** OMIT AT CONCRETE ENTRANCES
SEE PLANS FOR EXISTING SURFACE TYPE

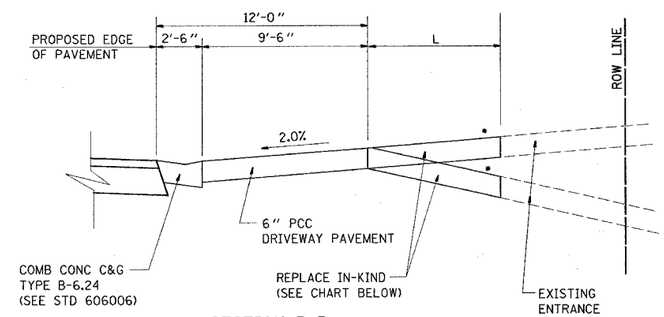

SECTION B-B

* SEE CROSS SECTIONS FOR SLOPE
** OMIT AT CONCRETE ENTRANCES
SEE PLANS FOR EXISTING SURFACE TYPE

TYPE OF ENTRANCE	EXISTING MATERIAL	NEW ENTRANCE MATERIAL (BEYOND RADIUS RETURNS)			
		PCC DRIVEWAY PAVEMENT 6"	INCIDENTAL BITUMINOUS CONC SURFACING, 3"	AGGREGATE BASE COURSE TYPE B 8"	AGGREGATE SURFACE COURSE TYPE B 6"
PRIVATE	CONCRETE	X			
	BITUMINOUS		X	X	
	AGGREGATE				X

"L" - SEE SCHEDULE
"W" - SEE SCHEDULE

REVISIONS	
NAME	DATE

ILLINOIS DEPARTMENT OF TRANSPORTATION

PRIVATE ENTRANCE DETAILS

FAP ROUTE 586
SECTION 60R-2, 37R-1
MADISON COUNTY

DRAWN BY:

PLOT DATE: Monday August 09, 2004 @ 10:56:05 AM

PLAN		BY	DATE
	SURVEYED		
	PLOTTED		
NOTE BOOK	ALIGNMENT CHECKED		
	RT. OF WAY CHECKED		
NO.	CADD FILE NAME		

8/9/2004
Monday August 09, 2004 @ 10:56:05 AM
LV41-63