F.A.U. RTE.	SECTION	COUNTY	TOTAL SHEETS	SHEET NO.
6108	(70X)N & TS-1	LA SALLE	46	29
STA. 252+00		TO STA. 261+00		
FED. ROAD DIST. NO.	ILLINOIS	FED. AID PROJECT		

CONTRACT NO. 86603

DESIGN		
INT.	DATE	REASON

STAGE 6B TRAFFIC CONTROL AND CONSTRUCTION SEQUENCE STA. 252+00 TO STA. 271+00

1. CONTRACTOR SHALL PLACE ALL ADVANCED WARNING SIGNAGE PRIOR TO BEGINNING ANY CONSTRUCTION. (SEE ADVANCE SIGNING DETAILS)
2. TRAFFIC ON IL RTE. 351 WILL REMAIN THE SAME AS STAGE 6A. TRAFFIC WILL BE SHIFTED TO THE SOUTH SIDE OF CIVIC ROAD AND N. 30th ROAD.
3. PLACE ALL TEMPORARY PAVEMENT MARKINGS AS SHOWN ON THE PLANS.
4. CONTRACTOR SHALL PROVIDE AND MAINTAIN TEMPORARY ENTRANCES WHEN REQUIRED DURING CONSTRUCTION.
5. REMOVE THE EXISTING PAVEMENT AND CONSTRUCT NEW PAVEMENT, SHOULDERS AND CURB AND GUTTER AS SHOWN ON THE PLANS.
6. TRAFFIC CONTROL AT THE INTERSECTION WILL REMAIN A 4 - WAY STOP CONDITION UNLESS OTHERWISE DIRECTED BY THE ENGINEER.

0 20 40
SCALE IN FEET

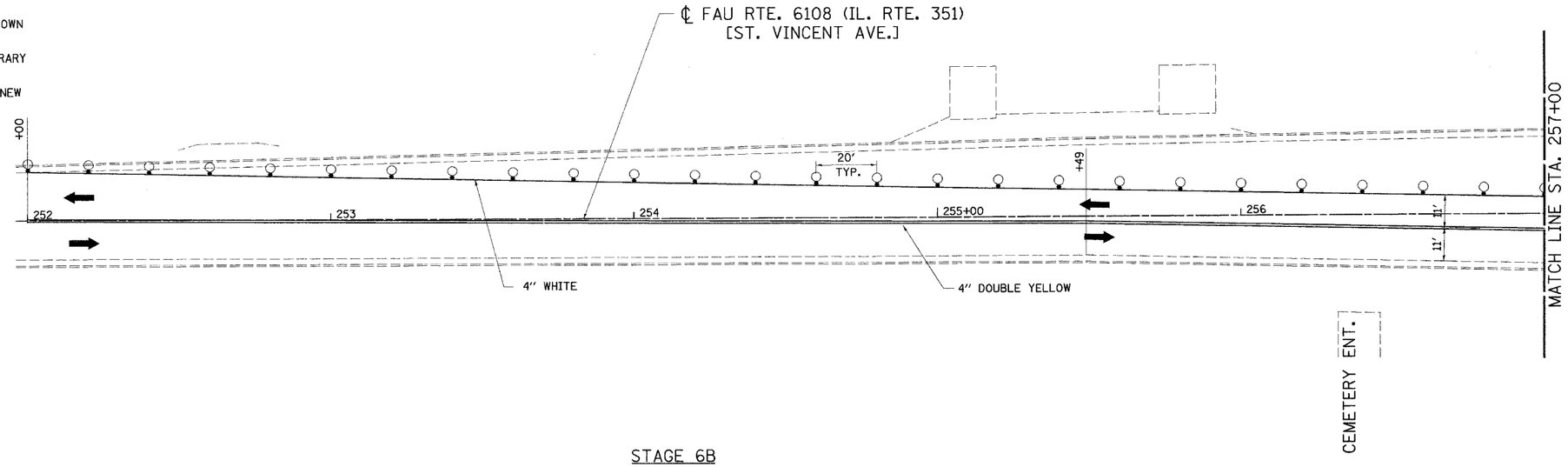

STAGE 6B

0 20 40
SCALE IN FEET

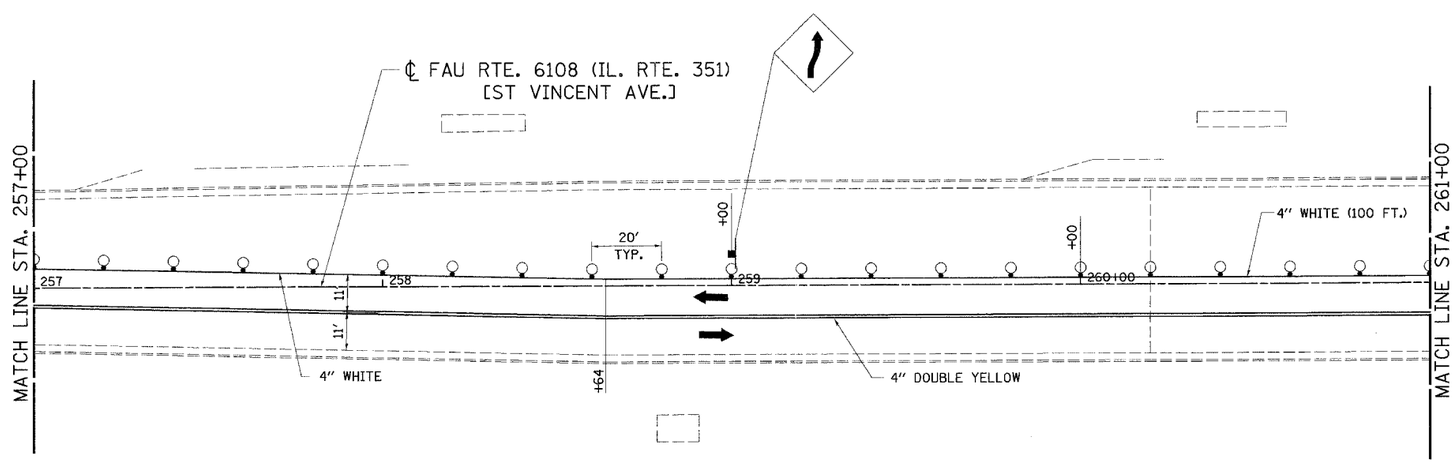

STAGE 6B

LEGEND

- DIRECTION OF TRAFFIC
- TYPE C BIDIRECTIONAL REFLECTOR
- TYPE III BARRICADE W/ FLASHING LIGHTS
- TYPE III BARRICADE
- DRUM OR BARRICADE WITH STEADY BURNING LIGHT
- WORK ZONE
- DRUM OR BARRICADE
- TEMPORARY WIDENING

PLOTS & CHECKS			
INT.	DATE	NO.	REASON

FILE NAME = $FILE$
PLOT SCALE = $PITSCL$ DRV = $PLOTTER$
PLOT DATE = $DATE$
PLOT TIME = $TIME$
OPERATOR = $USER$

CHECKS		
INT.	DATE	REASON

REVISIONS	
NAME	DATE

ILLINOIS DEPARTMENT OF TRANSPORTATION

STAGE 6B TRAFFIC CONTROL & CONSTRUCTION

STA. 252+00 TO STA. 261+00

FAU 6108 (IL RTE. 351)
SECTION (70X)N & TS-1
LA SALLE COUNTY

SCALE: VERT.
HORIZ.
DATE 05/07/03

DRAWN BY: Heb
DESIGNED BY: COLBROOK
CHECKED BY: COLBROOK

GREENE & BRADFORD, INC.
OF SPRINGFIELD
CONSULTING ENGINEERS
1504 CONVENTION DRIVE
SPRINGFIELD, ILLINOIS 62707
PROFESSIONAL DESIGN FIRM NO. 184-000175
PROFESSIONAL & STRUCTURAL ENGINEERING CORPORATION
(217) 753-8241, (217) 753-9217 (FX), E-MAIL: : mail@greenebradford.com

COMPUTER FILE NO.
STAGE6-B-1

PROJECT 01194.b_n
02/17/04 Heb

IDOTPL-20 1"=20' 8/07/00

FAU 6108 (IL. RTE. 351) LA SALLE COUNTY