F.A.P. RTE.	SECTION	COUNTY	TOTAL SHEETS	SHEET NO
711	115(BY-1)BR	VERMILION	93	60
FED. ROAD DIST. NO.	ILLINOIS	FED. AID PROJECT		

CONTRACT NO. 90843

SHEET NO. 13
SHEETS 20

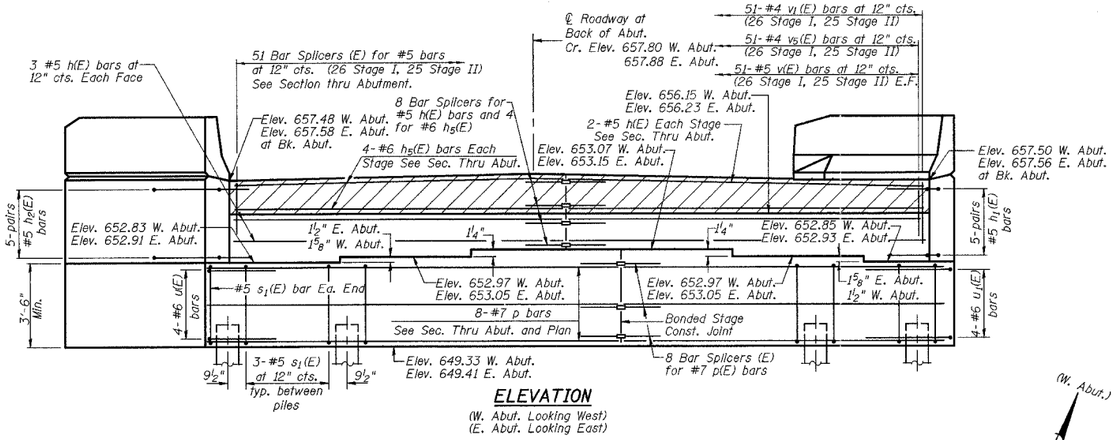

ELEVATION

(W. Abut. Looking West)
(E. Abut. Looking East)

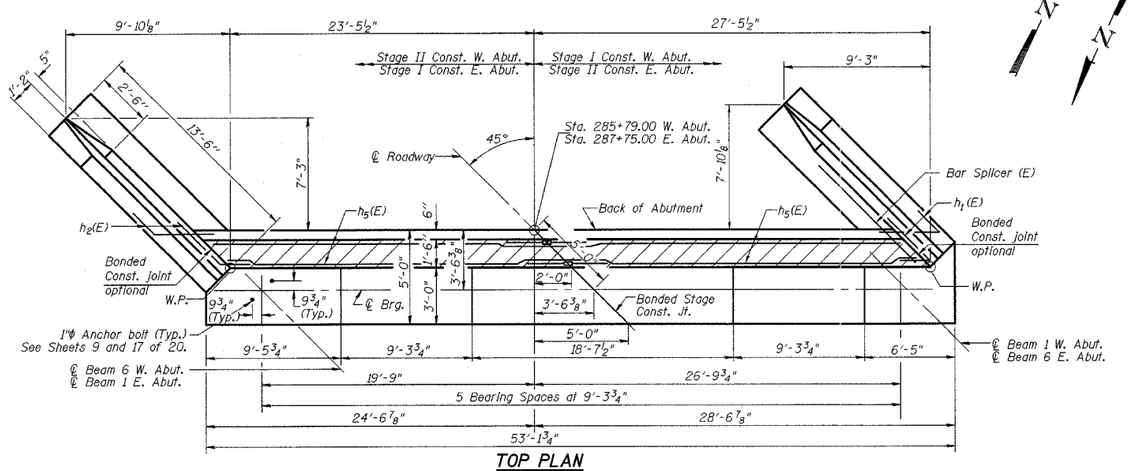

TOP PLAN

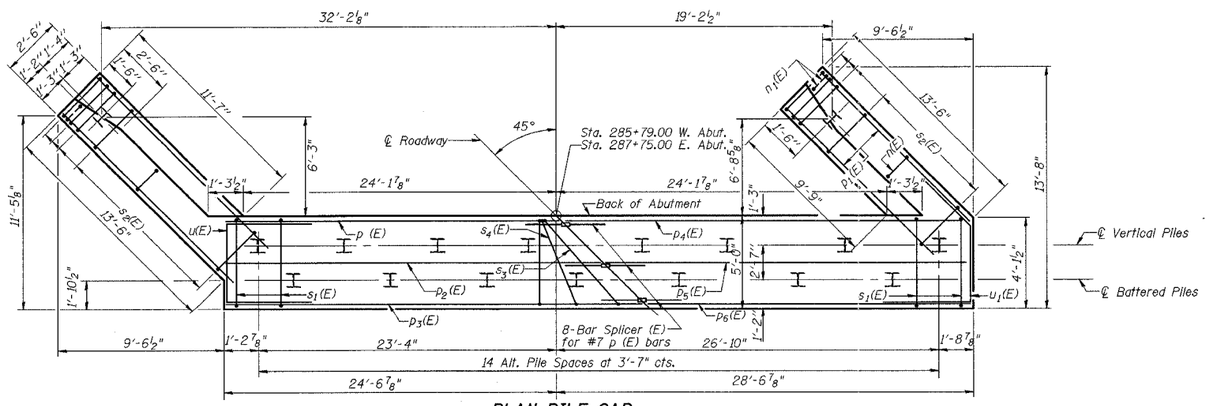

PLAN-PILE CAP

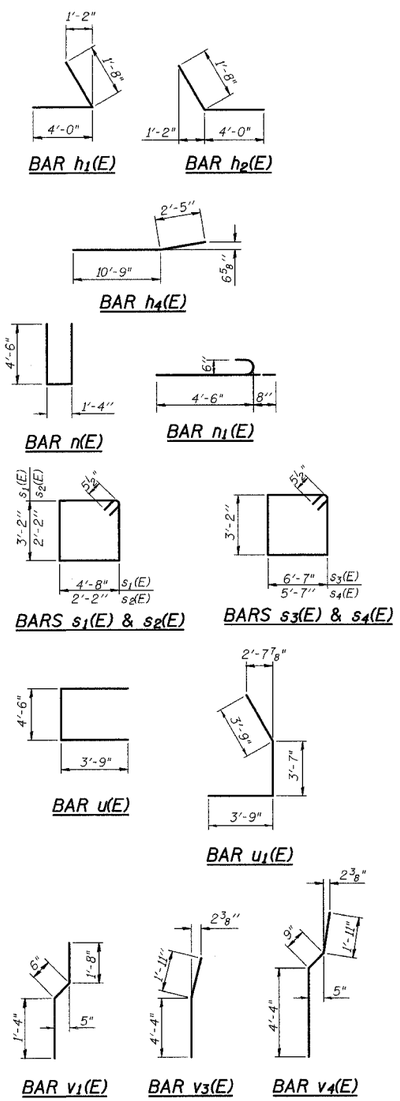

PILE DATA

Type: HP 12X53
Capacity: 45 Tons
Driven to: 68 Tons
Est. Length: 48' at W. Abut.
Est. Length: 33' at E. Abut.
No. Required: 33 + 1 Test Pile (W. Abut.)

MIN BAR LAPS

#5 bars = 1'-8"
#6 bars = 2'-0"

BILL OF MATERIAL

(For Both Abutments)

Bar	No.	Size	Length	Shape
h(E)	32	#5	25'-0"	
h1(E)	20	#5	5'-8"	
h2(E)	20	#5	5'-8"	
h3(E)	40	#4	13'-2"	
h4(E)	24	#4	13'-2"	
h5(E)	16	#6	25'-0"	
n(E)	44	#6	10'-4"	
n1(E)	24	#6	5'-2"	
p(E)	6	#7	24'-4"	
p1(E)	24	#7	13'-2"	
p2(E)	4	#7	26'-8"	
p3(E)	6	#7	29'-0"	
p4(E)	6	#7	27'-2"	
p5(E)	4	#7	25'-8"	
p6(E)	6	#7	23'-4"	
s1(E)	80	#5	16'-7"	
s2(E)	60	#5	9'-7"	
s3(E)	4	#5	20'-5"	
s4(E)	4	#5	18'-5"	
u(E)	8	#6	12'-0"	
u1(E)	8	#6	11'-1"	
v(E)	204	#4	4'-5"	
v1(E)	102	#4	3'-6"	
v2(E)	56	#6	7'-1"	
v3(E)	12	#6	6'-3"	
v4(E)	44	#6	7'-0"	
v5(E)	102	#4	2'-4"	
Structure Excavation		Cu Yd	204.4	
Concrete Structures		Cu Yd	123.0	
Reinforcement Bars, Epoxy Coated		Pound	10.050	
Driving Steel Piles		Foot	1,329	
Furnishing Steel Piles HP 12x53		Foot	1,329	
Test Piles Steel HP 12x53		Each	1	
Bar Splicers		Each	142	
Bridge Seat Sealer		Sq Ft	367	

NOTES:

Reinforcement bars designated (E) shall be epoxy coated.
For details of Bar Splicers, see Sheet 16 of 20.
For Wing Wall Elevations see Sheet 14 of 20.
All edges have ¾" chamfer except as noted.
Pour steps monolithically with cap.

Hatched area to be poured after superstructure forms have been removed. Quantity of concrete included with Concrete Superstructure.

Work this Sheet with Sheet 14 of 20.

ILLINOIS DEPARTMENT OF TRANSPORTATION

ABUTMENTS
U.S. ROUTE 136 OVER
BEAN CREEK
F.A.P. ROUTE 711
SECTION 115(BY-1)BR
VERMILION COUNTY
STA. 286+77.00
STRUCTURE NUMBER 092-0201

DATE: OCT. 2003

DRAWN BY: MLO/NJV
CHECKED BY: PBB/SJK