F.A.I. RTE.	SECTION	COUNTY	TOTAL SHEETS	SHEET NO.
72	*	MACON	135	109

*(58-62,58-62-1,58-63)RS
CONTRACT NO. 90879

SHEET 14 of 16

GIRDER REACTIONS

R℄	(K)	42.9
R⅊	(K)	42.3
Imp.	(K)	9.5
R (Total)	(K)	94.7

Notes: Diaphragm removal and reinstallation may be required to facilitate drilling holes. Cost shall be included in the cost of Furnishing and Erecting Structural Steel.
New steel extensions, side retainers, shim ℄'s, connection bolts, and anchor bolts are included in Furnishing and Erecting Structural Steel.
See Sheet 16 of 16 for Anchor Bolt installation.
Prior to ordering any material, the Contractor shall verify in the field all bearing height and shim thickness dimensions.
Min. jack capacity = 51 Tons.

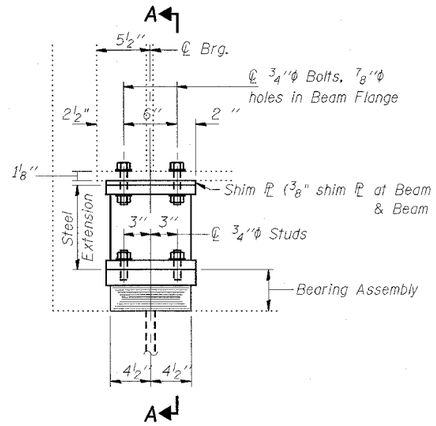

ELEVATION AT ABUTMENTS

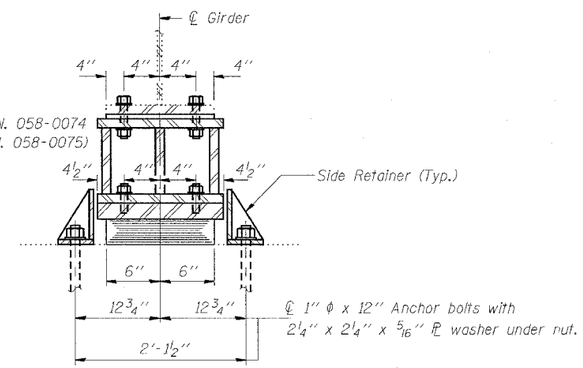

SECTION A-A

TYPE I ELASTOMERIC EXP. BRG.

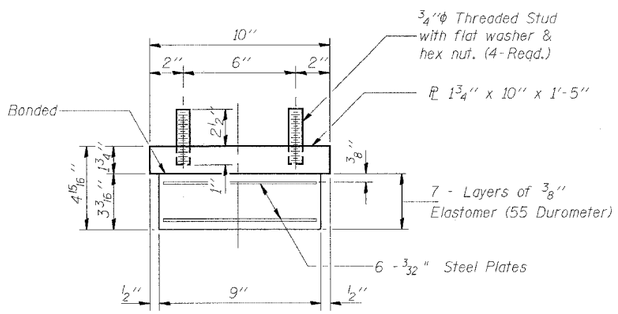

BEARING ASSEMBLY

Note: Shim plates shall not be placed under Bearing Assembly.

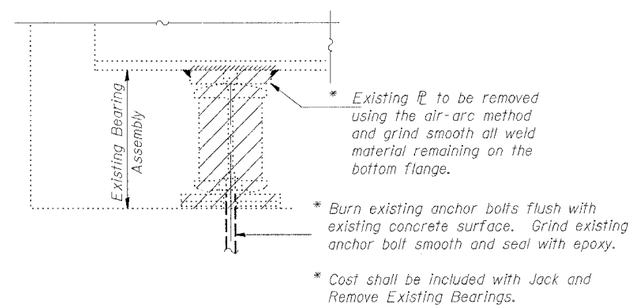

EXISTING BEARING REMOVAL DETAIL

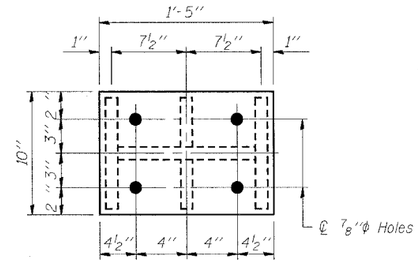

PLAN TOP AND BOTTOM PLATE

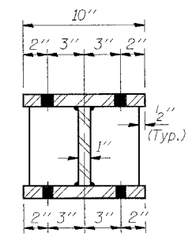

SECTION B-B

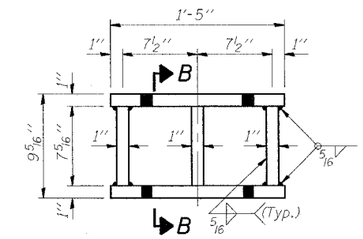

STEEL EXTENSION DETAIL

BILL OF MATERIAL

Item	Unit	Total	S.N. 058-0074	S.N. 058-0075
Elastomeric Bearing Assembly Type I	Each	19.0	9.0	10.0
Jack and Remove Existing Bearing	Each	19.0	9.0	10.0
Furnishing and Erecting Structural Steel	Lbs.	2450.0	2140.0	2310.0

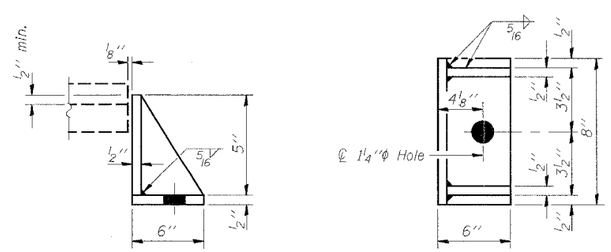

SIDE RETAINER

Equivalent rolled angle with stiffeners will be allowed in lieu of welded plates.

BEARING DETAILS
S. ABUTMENT
F.A.I. ROUTE 72 SEC. 58-63HVB
MACON COUNTY
SN 058-0074 & S.N. 058-0075