F. A. I. RTE.	SECTION	COUNTY	TOTAL SHEETS	SHEET NO.
24	*	**	189	178
STA.		TO STA.		
FED. ROAD DIST. NO.	ILLINOIS	FED. AID PROJECT		

* X1-2,44(2,3,4)RS,BSMARTFY04-4
** WILLIAMSON/JOHNSON
CONTRACT NO. 98758

WINGWALL MODIFICATION FOR TYPE 6 TERMINAL

TO BE USED:
SN 100-0060

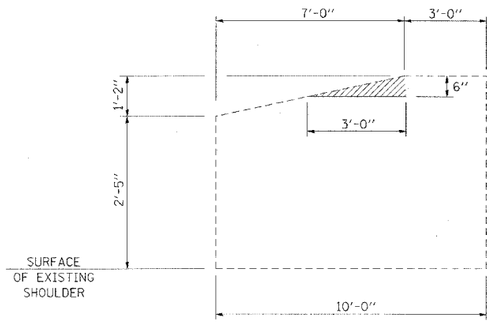

INSIDE ELEVATION (EXISTING)

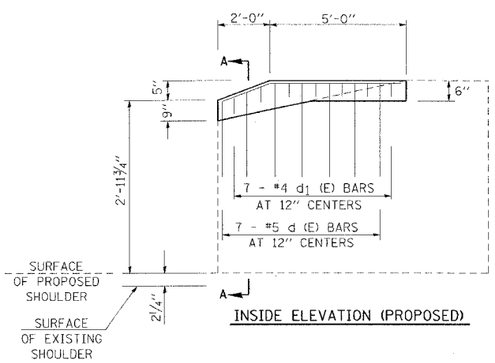

INSIDE ELEVATION (PROPOSED)

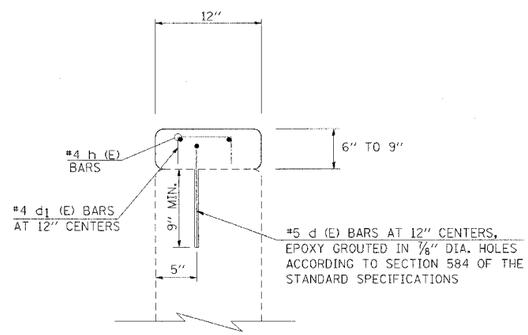

SECTION A-A

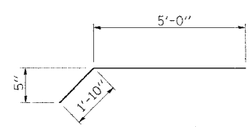

BAR h (E)

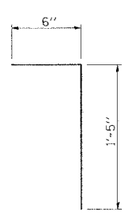

BAR d (E)

BAR d1 (E)

BILL OF MATERIAL

BAR	SIZE	NO.	LENGTH
d (E)	#5	7	1'-11"
d1 (E)	#4	7	1'-7"
h (E)	#4	2	6'-10"

CONCRETE REMOVAL	CU YDS	0.1
CONCRETE SUPERSTRUCTURE	CU YDS	0.2
REINFORCEMENT BARS EPOXY COATED	LBS	31

NOTES:
QUANTITIES ARE PER WING WALL
BARS DESIGNATED (E) SHALL BE EPOXY COATED.
HATCHED AREA INDICATES CONCRETE REMOVAL.

Wednesday January 12, 2005 @ 9:20:05 AM
c:\proj_pects\J982M02\west124-2.dgn 1"=1-62