STATE OF ILLINOIS
DEPARTMENT OF TRANSPORTATION

ROUTE NO.	SECTION	COUNTY	TOTAL SHEETS	SHEET NO.
F.A.I. 24	*	MASSAC	234	160
FED. ROAD DIST. NO. 7		ILLINOIS	FED. AID PROJECT-	

SHEET NO.
SHEETS

* 641.2.2-1.3-1.3)RS-1 BSMART FY2002-2

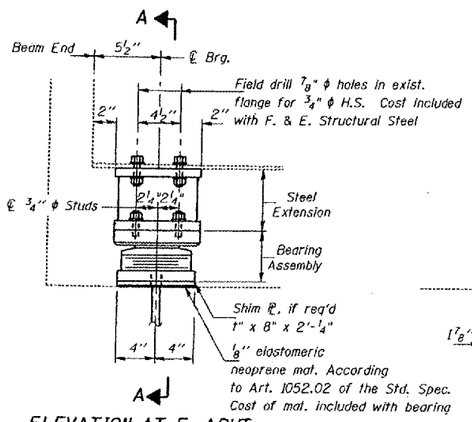

ELEVATION AT E. ABUT.

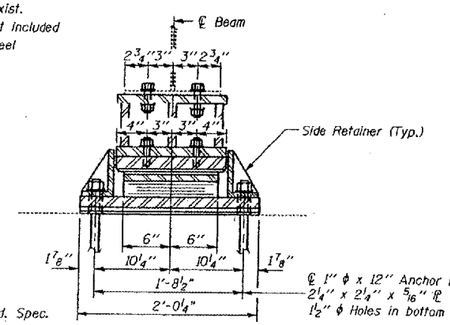

SECTION A-A

TYPE II TFE ELASTOMERIC EXP. BRG.

Notes: See sheet 172 for Anchor Bolt installation.

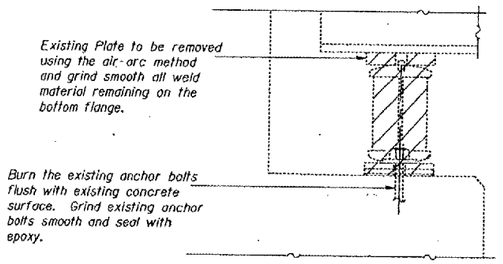

EXISTING BEARING REMOVAL DETAIL

Cost is included with Jack and Remove Existing Bearings

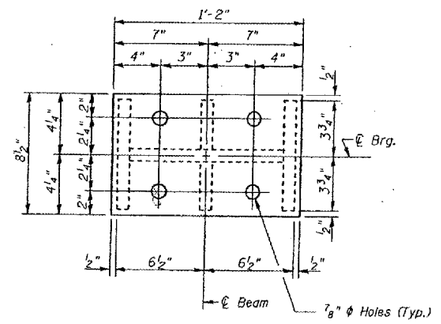

PLAN-TOP & BOTTOM PLATE

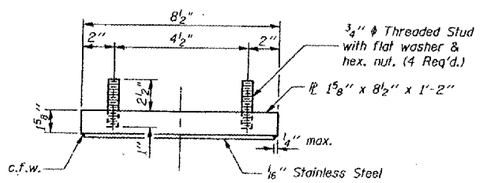

TOP BEARING ASSEMBLY

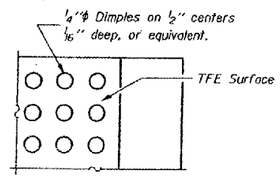

PLAN-TFE SURFACE

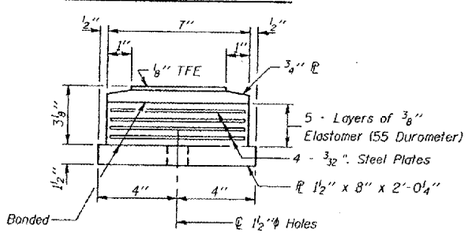

BOTTOM BEARING ASSEMBLY

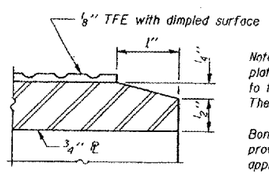

SECTION THRU TFE

Note: The ⅛" TFE sheet shall be bonded directly to the top steel plate with a two-component, medium viscosity epoxy resin, conforming to the requirements of the Federal Specification MMM-A-134, Type I. The bond agent shall be applied on the full area of the contact surfaces.

Bonding of ⅛" TFE sheet during vulcanizing process will be permitted provided the process and method of adjusting assembly height is approved by the Engineer.

Notes:

Prior to ordering any material, the Contractor shall verify in the field all bearing height and shim thickness dimensions. The minimum jack capacity required is 35 Tons.

New steel extensions, side retainers, connection bolts, anchor bolts and any shim are included in "Furnishing and Erecting Structural Steel".

Hatched areas indicate Jack and Remove Existing Bearings.

Existing diaphragm removal and new diaphragm erection shall be coordinated with drilling holes in bottom flange for bearing attachment, if necessary, to provide clearance for the drill.

GIRDER REACTIONS

RP	(K)	22.60
RL	(K)	37.30
Imp.	(K)	11.19
R (Total)	(K)	71.09

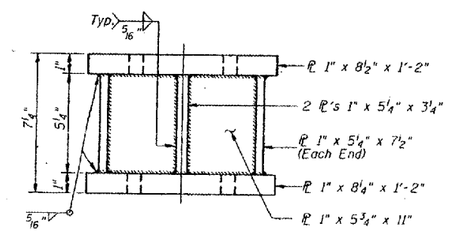

STEEL EXTENSION AT EAST ABUT.

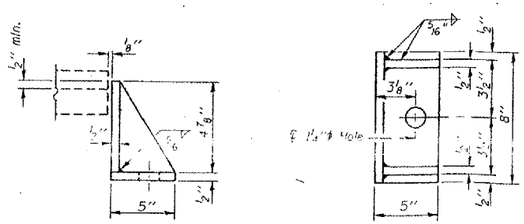

SIDE RETAINER

Equivalent rolled angle with stiffeners will be allowed in lieu of welded plates.

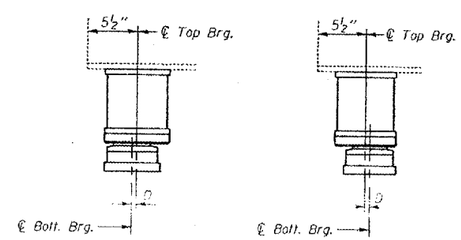

BELOW 50°F.
(Move bott. brg. away from fixed brg.)

ABOVE 50°F.
(Move bott. brg. toward fixed brg.)

SETTING ANCHOR BOLTS AT EXP. BRG.

D=⅛" per each 100' of expansion for every 15° temp. change from the normal temp. of 50°F.

BILL OF MATERIAL

Item	Unit	Total
Elastomeric Bearing Assembly Type II	Each	6
Jack and Remove Existing Bearings	Each	6

DESIGNED:	CMW
CHECKED:	TWH
DRAWN:	CMW
CHECKED:	TWH

FOR INFORMATION ONLY:

BRIDGE NO. 3 STRUCTURE 064-0020

Thu Jul 5 10:39:6 2001
c:\projects\d90000\d9000bp8.dgn LV=63