Illinois Department of Transportation

NOTES:

1. Bars indicated thus 20 x 3 - #5 etc. indicates 20 lines of bars with 3 lengths per bar.
2. For details of piles see Sheet SA26.
3. For details of Bar Splicers, see Sheet SA27.
4. Piles are numbered sequentially as shown.
5. See Sheet SA26 for Metal Shell Reinforcement Detail. Typical for all piles.
6. Apply Concrete Sealer to top and sides of Cap.

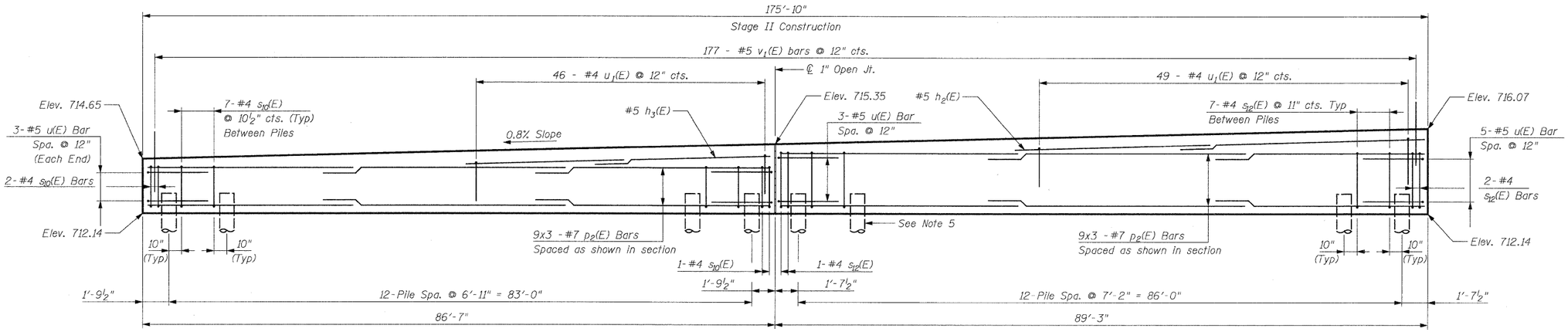

ELEVATION

(Looking West)

TYP. LAP SPLICE

BAR SIZE	MIN. LAP
#5	2'-11"
#7	5'-10"

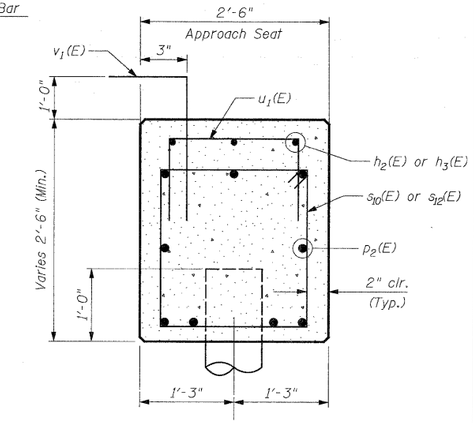

SECTION THRU CAP

(Looking North)

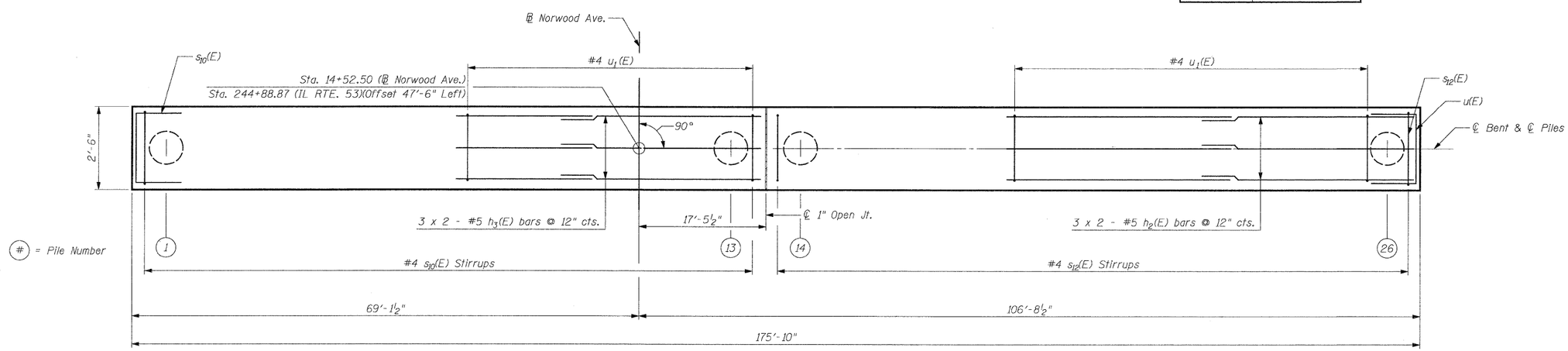

PLAN

BILL OF MATERIAL

Bar	No.	Size	Length	Shape
p_2(E)	54	#7	33'- 7"	
h_2(E)	6	#5	25'- 6"	
h_3(E)	6	#5	24'- 0"	
s_{10}(E)	88	#4	9'- 5"	
s_{12}(E)	88	#4	10'- 9"	
u(E)	14	#5	6'- 7"	
u_1(E)	95	#4	7'- 2"	
v_1(E)				
Porous Granular Embankment (Special)			Cu. Yd.	93
Structure Excavation			Cu. Yd.	193
Concrete Structures			Cu. Yd.	52.5
Reinforcement Bars, Epoxy Coated			Pound	6,430
Furnishing Metal Shell Piles, 14" x 0.312"			Foot	1,624
Driving Piles			Foot	1,624
Concrete Sealer			Sq. Ft.	1,574

BENT CAP TABLE

Precore To Elevation	
Piles 1-8	Piles 9-26
702.10	702.08

PILE DATA

Type: Metal Shell - 14 in. dia. x 0.312 in. wall
Nominal Required Bearing: 382 kips
Factored Resistance Available: 210 kips
Est. Length: Piles 1-8: 59', Piles 9-26: 64'
No. Production Piles: 26
No. Test Piles: 0

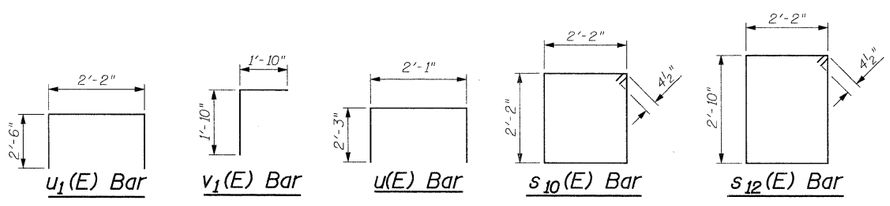

DESIGNED	J. Vermillion
CHECKED	J. Refvik
DRAWN	J. Vermillion
CHECKED	J. Refvik

PATRICK ENGINEERING

PATRICK ENGINEERING INC.
4970 VARSITY DRIVE
LISLE, IL 60532
patrickengineering.com

NORWOOD AVE. WEST APPROACH BENT
STRUCTURE NO. 022-0012

SHEET NO.	F.A.P RTE.	SECTION	COUNTY	TOTAL SHEETS	SHEET NO.
SA24 OF SA37	2578	532B	DUPAGE	781	628
			CONTRACT NO. 60477		
	12/3/2010	ILLINOIS	FED. AID PROJECT		

q:\idot\9356_a0_(1153)\drawings\cadd sheets\D19139797-sht-220012_628.dgn