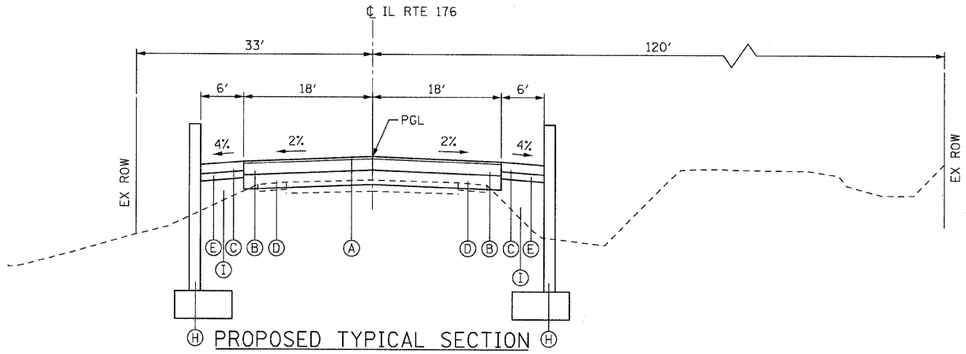

PROPOSED TYPICAL SECTION

STA. 1159+63 TO STA. 1160+03

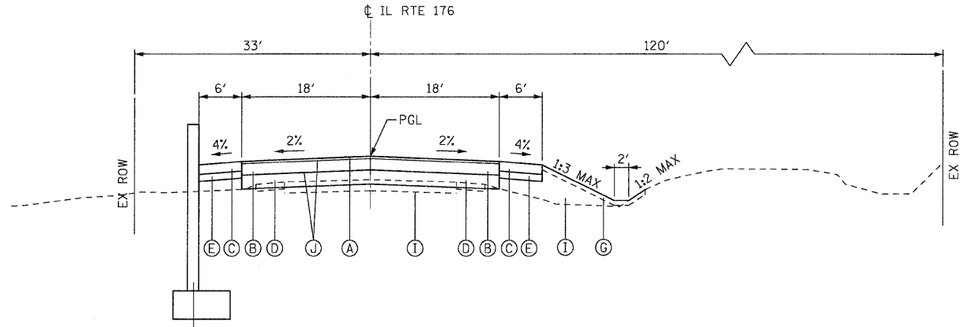

PROPOSED TYPICAL SECTION

STA. 1160+65 TO STA. 1161+73

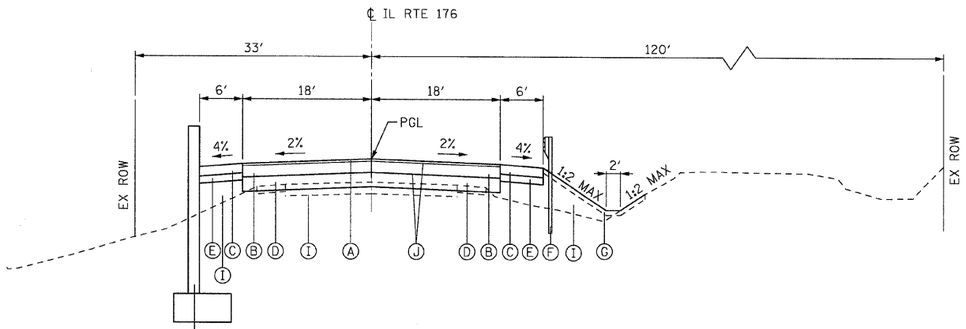

PROPOSED TYPICAL SECTION

STA. 1160+03 TO STA. 1160+65

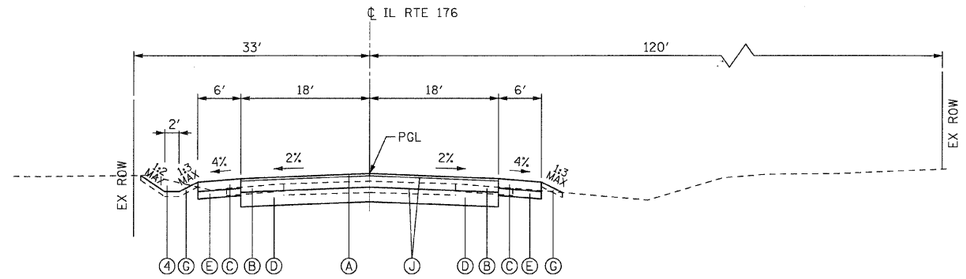

PROPOSED TYPICAL SECTION

STA. 1161+73 TO STA. 1163+00

HOT-MIX ASPHALT MIXTURE REQUIREMENTS	
MIXTURE TYPE	**AIR VOIDS**
SURFACE COURSE	
HOT-MIX ASPHALT SURFACE COURSE, MIX "D", N70 2"	4% @ 70 Gyr.
BINDER COURSE	
HOT-MIX ASPHALT BINDER COURSE, IL-19.0, N70 10"	4% @ 70 Gyr.
DRIVEWAY PAVEMENT	
HOT-MIX ASPHALT BASE COURSE, 8"	4% @ 50 Gyr.
HOT-MIX ASPHALT SURFACE COURSE, MIX "C", N50 (IL-9.5mm) 2"	4% @ 50 Gyr.
TEMPORARY PAVEMENT	
HOT-MIX ASPHALT BINDER IL-19MM 8 1/2"	4% @ 50 Gyr.
HOT-MIX ASPHALT SURFACE COURSE, MIX "D", N50 (IL-9.5MM) 1 1/2"	4% @ 50 Gyr.

THE UNIT WEIGHT USED TO CALCULATE ALL HMA SURFACE MIXTURE QUANTITIES IS 112 LBS/SQ YD/IN.

The "AC Type" for Polymerized HMA Mixes SHALL BE "SBS/SBR PG 70 -22" AND
FOR NON-POLYMERIZED HMA THE "AC TYPE" shall be "PG 64 -22" UNLESS modified by District ONE Special Provisions.
FOR "PERCENT OF RAP" SEE DISTRICT ONE SPECIAL PROVISIONS.

LEGEND

EXISTING CONDITIONS

1. EXISTING HMA PAVEMENT
2. EXISTING AGGREGATE SHOULDER
3. EXISTING STEEL PLATE BEAM GUARDRAIL
4. EARTH EXCAVATION
5. PAVEMENT REMOVAL
6. AGGREGATE SHOULDER TO BE REMOVED
7. GUARDRAIL REMOVAL

PROPOSED CONDITIONS

- (A) HOT-MIX ASPHALT SURFACE COURSE, MIX "D", N70, 2"
- (B) HOT-MIX ASPHALT BINDER COURSE, IL-19.0, N70, 10"
- (C) HOT-MIX ASPHALT SHOULDER, 8"
- (D) AGGREGATE SUBGRADE 12"
- (E) SUBBASE GRANULAR MATERIAL, TYPE B, 6"
- (F) STEEL PLATE BEAM GUARDRAIL, TYPE A, 6 FOOT POSTS
- (G) DITCH RESTORATION:
  - -EROSION CONTROL BLANKET
  - -SEEDING, CLASS 2A
  - -TOPSOIL FURNISH AND PLACE 4"
- (H) CONCRETE RETAINING WALL
- (I) FILL/FURNISHED EXCAVATION
- (J) BITUMINOUS MATERIALS PRIME COAT

PLAN	SURVEYED	BY	DATE
NOTE BOOK NO.	PLOTTED		
	ALIGNMENT CHECKED		
	R.O.W. CHECKED		
	CADD FILE NAME		

PLAN	SURVEYED	BY	DATE
NOTE BOOK NO.	PLOTTED		
	ALIGNMENT CHECKED		
	R.O.W. CHECKED		
	CADD FILE NAME		

...\D160J67-sht-typical02.dgn
12/23/2010
9:41:53 AM

Primera

DESIGNED	JRB	REVISED	-
DRAWN	JRB	REVISED	-
CHECKED	RJD	REVISED	-
DATE	JANUARY 3, 2011	REVISED	-

STATE OF ILLINOIS
DEPARTMENT OF TRANSPORTATION

IL ROUTE 176 OVER EAST SKOKIE
PROPOSED TYPICAL SECTIONS

SCALE: NTS | SHEET NO. 2 OF 2 SHEETS | STA. | TO STA.

F.A.U. RTE.	SECTION	COUNTY	TOTAL SHEETS	SHEET NO.
1238	C-B-I	LAKE	61	7

CONTRACT NO. 60J67

ILLINOIS FED. AID PROJECT