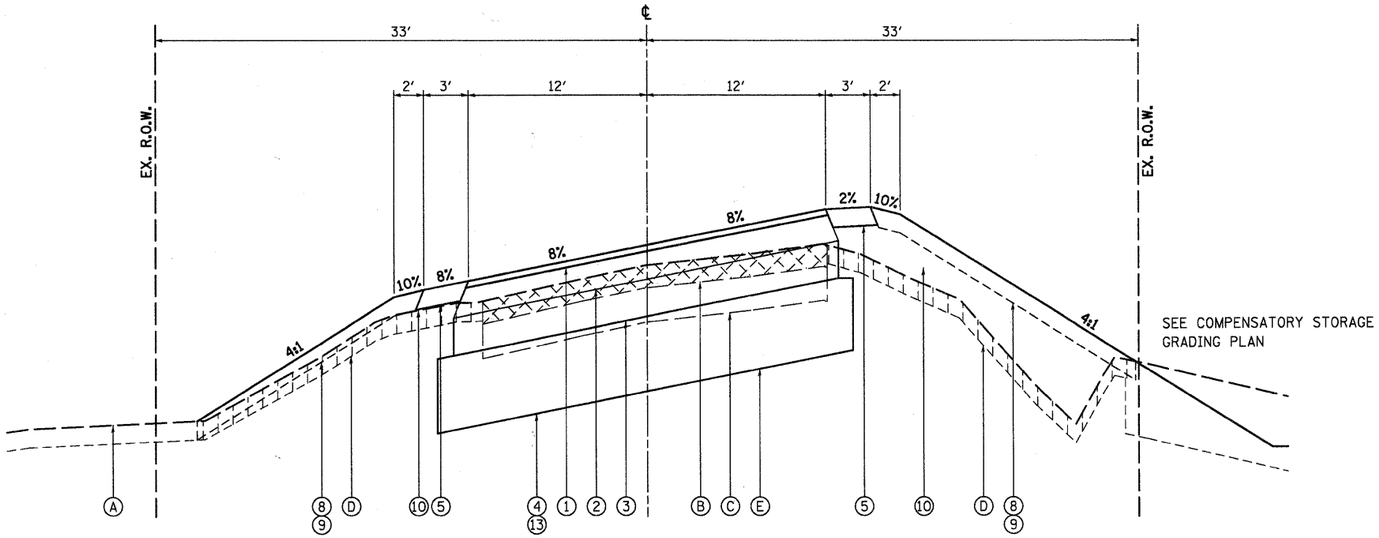

PROPOSED BOLCUM ROAD

STA. 125+74 LT./STA. 124+91.8 RT. TO STA. 126+75

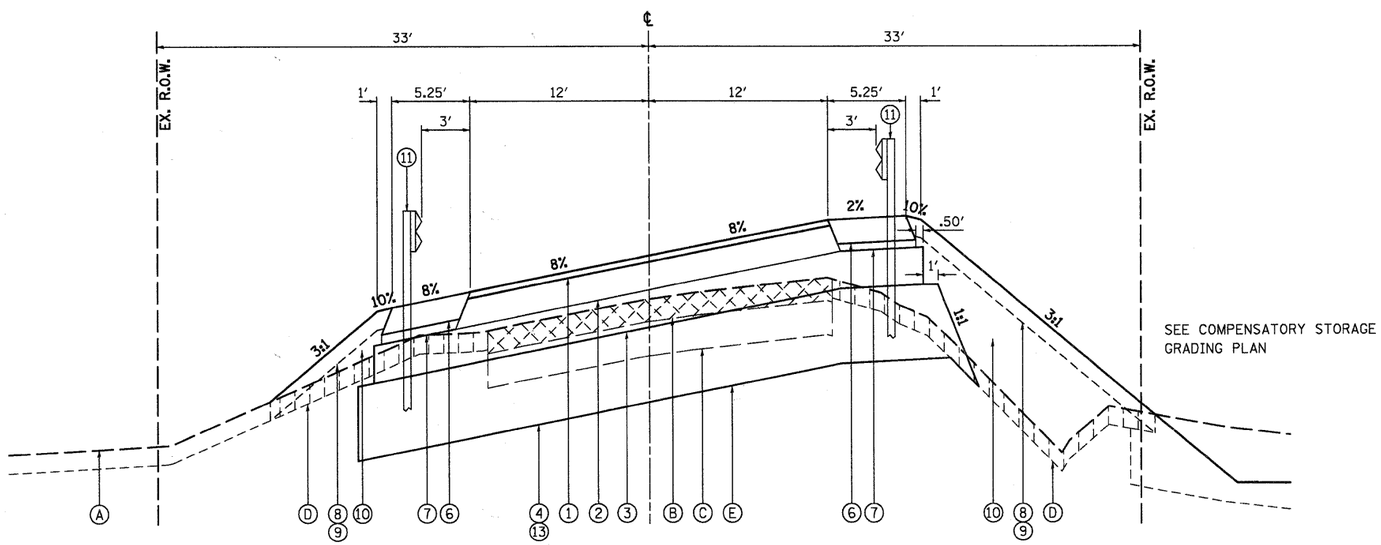

PROPOSED BOLCUM ROAD

STA. 123+64 TO STA. 125+74 LT./STA. 124+91.8 RT.

LEGEND, EXISTING

- (A) EXISTING GROUND
- (B) EXISTING HOT-MIX ASPHALT PAVEMENT, 7.0"-7.3" (TO BE REMOVED - 44000100)
- (C) EXISTING AGGREGATE BASE, 11" (REMOVED AS NECESSARY-INCLUDED IN EARTH EXCAVATION)
- (D) EXISTING TOPSOIL - (TO BE REMOVED - 20201200)
- (E) EXISTING UNSUITABLE MATERIAL - (TO BE REMOVED - 20201200)

LEGEND, PROPOSED

- (1) 2" HMA SURFACE COURSE, MIX "D", N50 (40603335)
- (2) 9" HMA BINDER COURSE, IL-19.0, N50 (2 LIFTS - 40603080)
- (3) AGGREGATE SUBGRADE, 12" (Z0001050)
- (4) GEOTECHNICAL FABRIC FOR GRND. STABILIZATION (21001000)
- (5) AGGREGATE SHOULDERS, TYPE B 6" (48101500)
- (6) HMA SHOULDERS, 8" (48203029)
- (7) SUB-BASE GRANULAR MATERIAL, TYPE B (31101100)
- (8) 6" TOPSOIL EXCAVATION AND PLACEMENT (21101505)
- (9) SEEDING CLASS 2A, 4(MOD.), 5(MOD.) W/EROSION CONTROL BLANKET
- (10) STRUCTURAL EMBANKMENT (TO BE PAID AS FURNISHED EXCAVATION - 20400800)
- (11) STEEL PLATE BEAM GUARDRAIL, TYPE A, 6' POSTS (63000001)
- (12) PIPE UNDERDRAIN WITH FILTER FABRIC ENVELOPE, 4" (60107600)
- (13) POROUS GRANULAR EMBANKEMENT, SUBGRADE (20700420)
- (14) PARAPET (SEE STRUCTURAL PLANS)
- (15) STRIP REFLECTIVE CRACK CONTROL TREATMENT (44300200)
- (16) LEVELING BINDER (MACHINE METHOD), N50 (40600625)
- (17) AGGREGATE WEDGE SHOULDER, TYPE B (48102100)

FILE NAME = P:\CBBEL WEST Projects\2009\09-0082 Bolcum PhII\Civil\Dgn\Sht\TYPICAL_4.dgn

WILLS BURKE KELSEY ASSOCIATES LTD. 116 West Main Street, Suite 201 St. Charles, Illinois 60174	USER NAME = $USER$	DESIGNED -	REVISED -	STATE OF ILLINOIS DEPARTMENT OF TRANSPORTATION	TYPICAL SECTIONS PROPOSED	F.A.U. RTE.	SECTION	COUNTY	TOTAL SHEETS / SHEET NO.
		DRAWN -	REVISED -			2332	03-14185-02-BR	KANE	73 / 11
	PLOT SCALE =	CHECKED -	REVISED -					CONTRACT NO.63521	
	PLOT DATE = 10/21/2010	DATE - 10/22/10	REVISED -		SCALE: SHEET NO. 11 OF 73 SHEETS STA. TO STA.	FED. ROAD DIST. NO. 1	ILLINOIS	FED. AID PROJECT	