MCHENRY COUNTY
DIVISION OF TRANSPORTATION

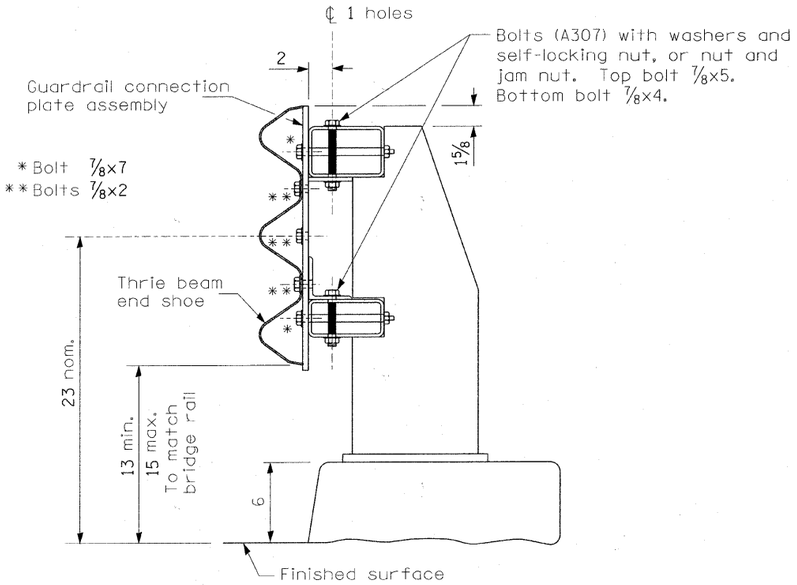

SECTION C-C

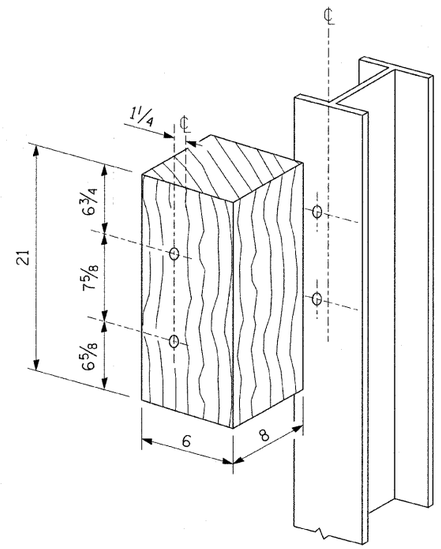

POSTS 1-11 WOOD BLOCKOUT DETAIL

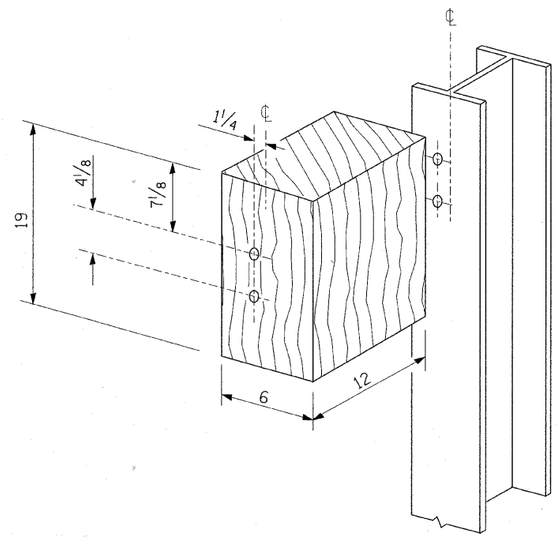

POST 12 WOOD BLOCKOUT DETAIL

(See Standard 630001 for post 13-17 blockouts.)

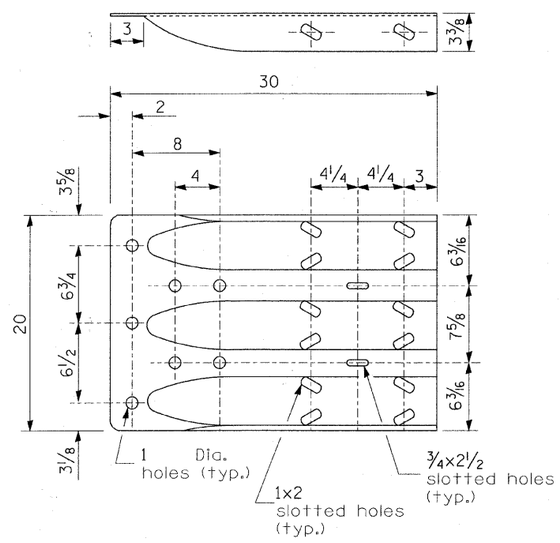

MODIFIED THRIE BEAM END SHOE DETAIL

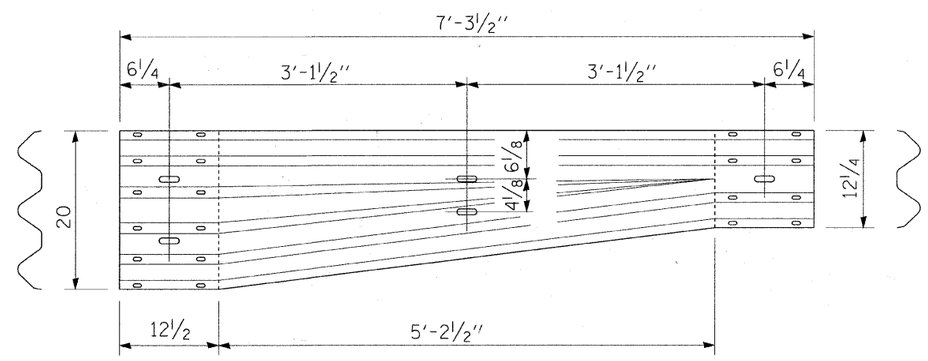

TRANSITION SECTION

(10 gauge rail element)

TRAFFIC BARRIER TERMINAL
TYPE 6A (SPECIAL)
STRUCTURE NO. 056-3178

SHEET NO. 2	F.A.S. RTE.	SECTION	COUNTY	TOTAL SHEETS	SHEET NO.
	0034	06-00320-02-BR	MCHENRY	65	50
3 SHEETS			CONTRACT NO. 63536		
	JOB NO. C-91-140-11	ILLINOIS	FED. AID PROJECT BRS-0034(107)		

DESIGNED	BLB
CHECKED	AS
DRAWN	BCD
CHECKED	BLB

COPYRIGHT © 2010 BY HANTTZ & WOODWARD, INC.
STATE OF ILLINOIS - PROFESSIONAL DESIGN FIRM
LICENSE NO.- 184-001123 - EXPIRES 4/30/2011
02/25/2011 10:43:59 AM