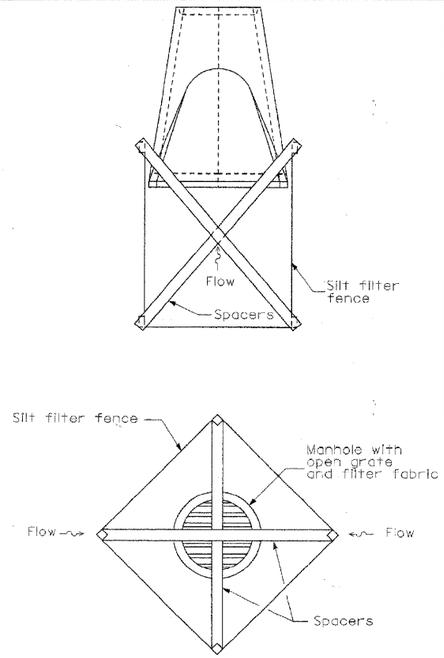

INLET AND PIPE PROTECTION DETAIL

CULVERT INLET PROTECTION - STONE

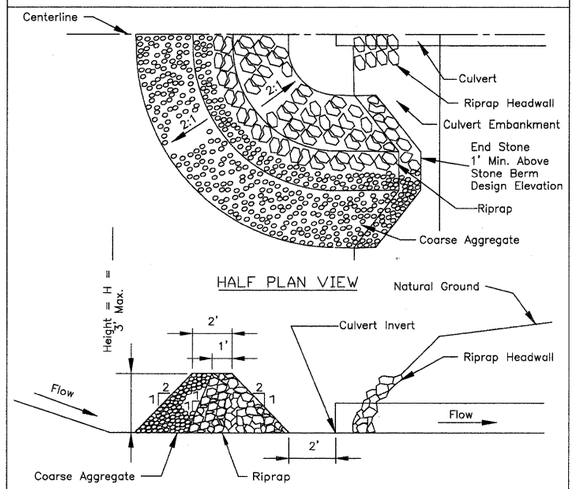

CENTERLINE CROSS SECTION

Notes:
1. Sediment shall be removed when the sediment has accumulated to one-half the height of the stone berm.
2. Coarse aggregate shall meet one of the following IDOT coarse aggregate gradations, CA-1, CA-2, CA-3 or CA-4.
3. Riprap shall meet IDOT gradation RR-3 or RR-4. Any permanent riprap, such as for the culvert headwall, shall meet IDOT Quality Designation A.
4. Coarse aggregate and riprap shall be placed according to construction specification 25 ROCKFILL using placement Method 1 and Class III compaction.
5. The maximum drainage area to the culvert being protected is 3 acres.
6. See plans for H dimension.
7. Tie the stone berm into the culvert embankment a minimum of 1 foot above the design elevation of the stone berm.

REFERENCE			STANDARD DWG. NO.
Project		NRCS Natural Resources Conservation Service	IL-508ST
Designed	Date		SHEET 1 OF 1
Checked	Date		DATE 1-29-99
Approved	Date		

ROCK CHECK DAM

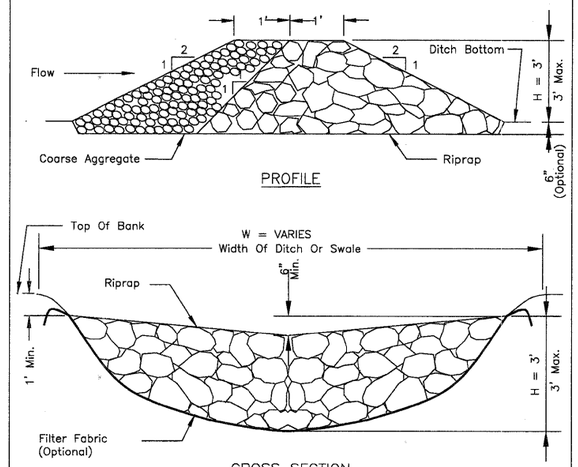

CROSS SECTION
CENTERLINE LOOKING DOWNSTREAM

NOTES;
1. Filter fabric shall meet the requirements of material specification 592 GEOTEXTILE, Table 1 or 2, Class I, II, or IV and shall be placed over the cleared area prior to the placing of rock.
2. Coarse aggregate shall meet one of the following IDOT gradations CA-3.
3. Riprap shall meet IDOT gradation RR-3 and meet Quality Designation A.
4. Coarse aggregate and riprap shall be placed according to construction specification 25 ROCKFILL using placement Method 1 and Class III compaction.
5. For added stability, the base of the dam may be keyed 6 inches into the soil.
6. See plans for spacing of dams and H dimensions.
7. Maximum drainage area to each dam is 10 acres.
8. ROCK CHECK DAM-COARSE AGGREGATE IL-605CA may be used for drainage areas under 2 acres.

REFERENCE			STANDARD DWG. NO.
Project		NRCS Natural Resources Conservation Service	IL-605R
Designed	Date		SHEET 1 OF 1
Checked	Date		DATE 1-29-99
Approved	Date		

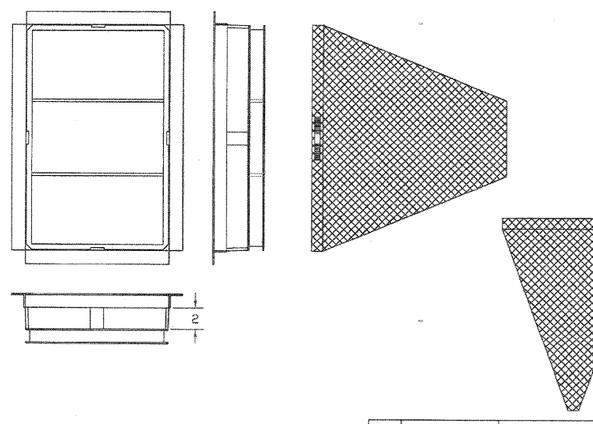

GENERAL NOTES:
FRAME: Top flange fabricated from 1¼"x1¼"x¼" angle. Base rim fabricated from 1¼"x¼" channel. Handles and suspension brackets fabricated from 1¼"x¼" flat stock. All steel conforming to ASTM-A36.
SEDIMENT BAG: Bag fabricated from 4 oz./sq.yd. non-woven polypropylene geotextile reinforced with polyester mesh. Bag secured to base rim with a stainless steel band and lock.

DATE	REVISIONS
01-22-02	Original

INLET FILTER

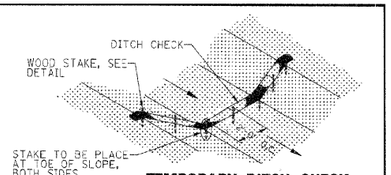

TEMPORARY DITCH CHECK, ROLLED EXCELSIOR DETAIL
N.T.S.

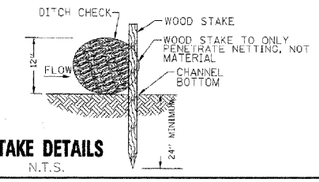

STAKE DETAILS
N.T.S.

FILE NAME = P:\CBBEL WEST Projects\2009\09-0832\CADD\Civil\Dgn\Sht\DETAILS-3.dgn

WILLS BURKE KELSEY ASSOCIATES LTD. 116 West Main Street, Suite 201 St. Charles, Illinois 60174 (630) 443-7755	USER NAME = $USER$	DESIGNED - LL	REVISED -	STATE OF ILLINOIS DEPARTMENT OF TRANSPORTATION	EROSION CONTROL DETAILS	F.A.P. RTE.	SECTION	COUNTY	TOTAL SHEETS	SHEET NO.
		DRAWN - NP	REVISED -			361	09-00214-02-LS	KANE/DUPAGE	80	79
	PLOT SCALE = N.T.S.	CHECKED -	REVISED -					CONTRACT NO.63542		
	PLOT DATE = 12/17/2010	DATE - 12/17/10	REVISED -		SCALE: N.T.S. / SHEET NO. 79 OF 80 SHEETS / STA. / TO STA.	FED. ROAD DIST. NO. 1	ILLINOIS	FED. AID PROJECT		