LEGEND

- PAVEMENT REMOVAL AND REPLACEMENT
- HMA BUTT JOINT
- EXISTING UTILITY POLE
- EXISTING TELEPHONE SPLICE BOX
- EXISTING FENCE POST (UNLESS NOTED OTHERWISE)
- TEMPORARY DITCH CHECK
- PROPOSED DITCH FLOW LINE
- EROSION CONTROL BLANKET (SEE SHEET NO. 34)

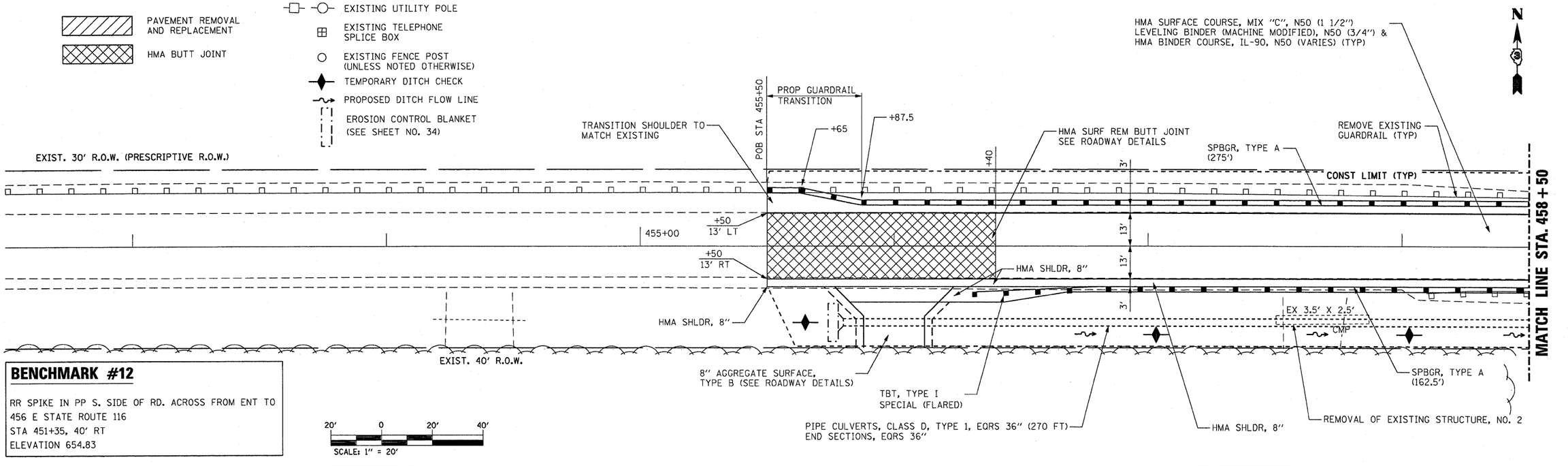

BENCHMARK #12

RR SPIKE IN PP S. SIDE OF RD. ACROSS FROM ENT TO
456 E STATE ROUTE 116
STA 451+35, 40' RT
ELEVATION 654.83

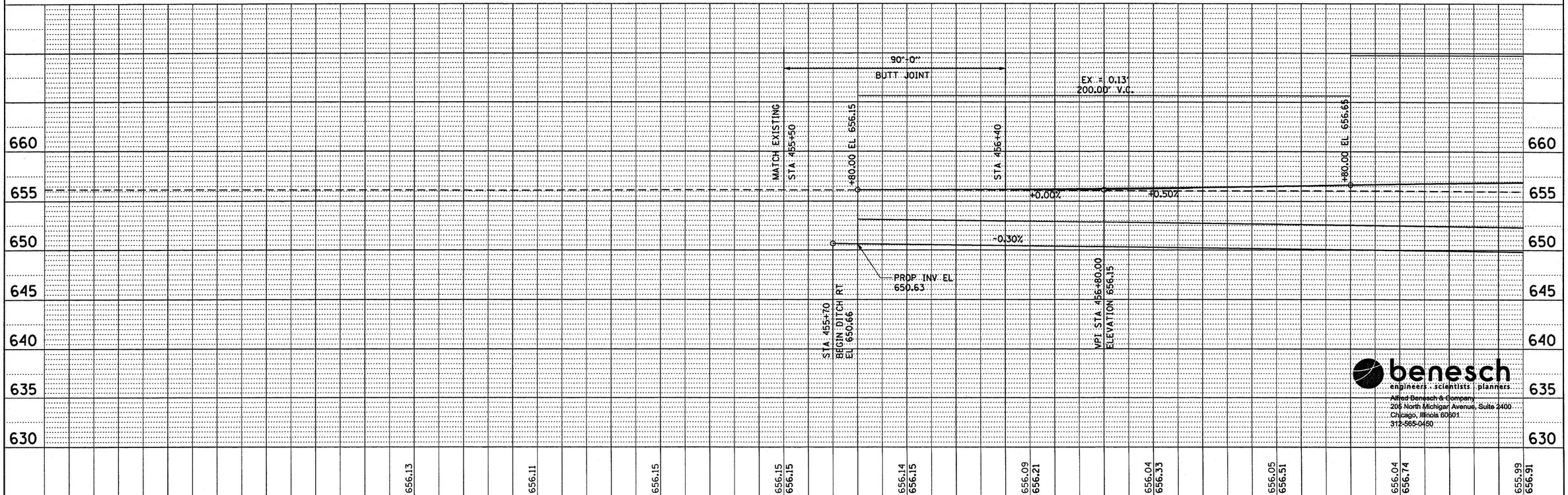

benesch
engineers . scientists . planners
Alfred Benesch & Company
205 North Michigan Avenue, Suite 2400
Chicago, Illinois 60601
312-565-0450

FILE NAME = c:\pw_work\pwidot\carpenterdj\dms68283\D366960-sht-plnprf1 MERGED.dgn	USER NAME = carpenterdj	DESIGNED - DC	REVISED - JMS 11-30-2010
		DRAWN - MRW	REVISED - XXX
	PLOT SCALE = 20.0000 ' / IN.	CHECKED - JMS	REVISED - XXX
	PLOT DATE = Dec 16, 2010 - 07:53:49 AM	DATE - 10-30-2010	REVISED - XXX

STATE OF ILLINOIS
DEPARTMENT OF TRANSPORTATION

PLAN AND PROFILE

SCALE: 1" = 20' | SHEET NO. 1 OF 2 SHEETS | STA. 455+50 TO STA. 458+50

F.A.P. RTE.	SECTION	COUNTY	TOTAL SHEETS	SHEET NO.
681	(117) BR-1	IROQUOIS	41	7
		CONTRACT NO. 66960		
FED. ROAD DIST. NO. 3	ILLINOIS	FED. AID PROJECT		

PLAN: NOTE BOOK NO. ___ SURVEYED ___ PLOTTED ___ ALIGNMENT CHECKED ___ RT. OF WAY CHECKED ___ CADD FILE NAME ___ BY ___ DATE ___

PROFILE: NOTE BOOK NO. ___ SURVEYED ___ PLOTTED ___ GRADES CHECKED ___ B.M. NOTED ___ STRUCTURE NOTAT'NS CH'KD ___ BY ___ DATE ___