STATE OF ILLINOIS
DEPARTMENT OF TRANSPORTATION

GENERAL NOTES

A Concrete Sealer shall be applied to the surfaces of the deck and parapets. See Special Provisions for Bridge Deck Concrete Sealer.

Existing pavement markings shall be temporarily covered prior to application of the deck surface treatment, to prevent the material from being applied over the markings. The temporary covering shall be removed after the application of the deck surface treatment and prior to opening to traffic. Cost included with Concrete Sealer.

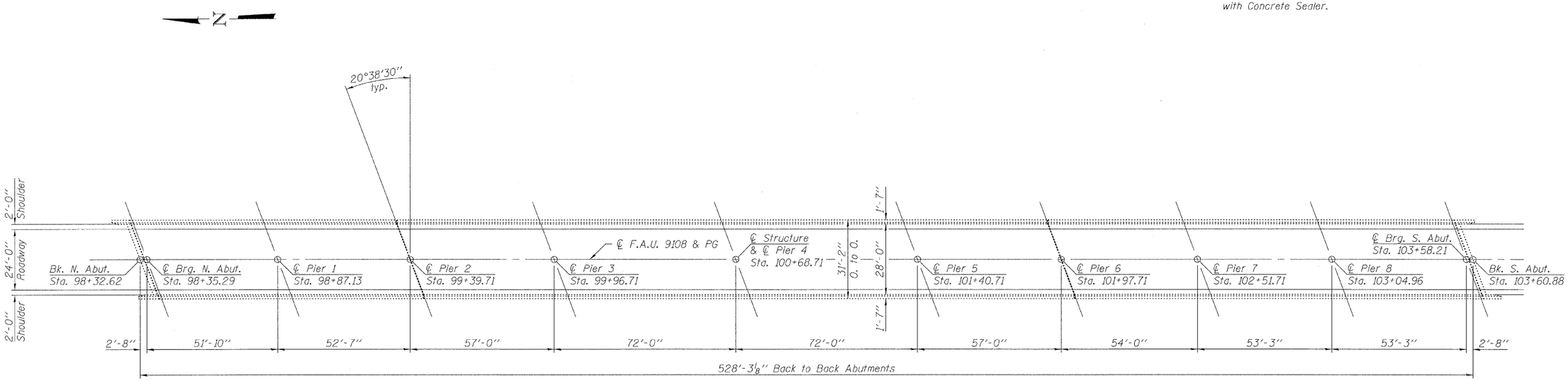

PLAN

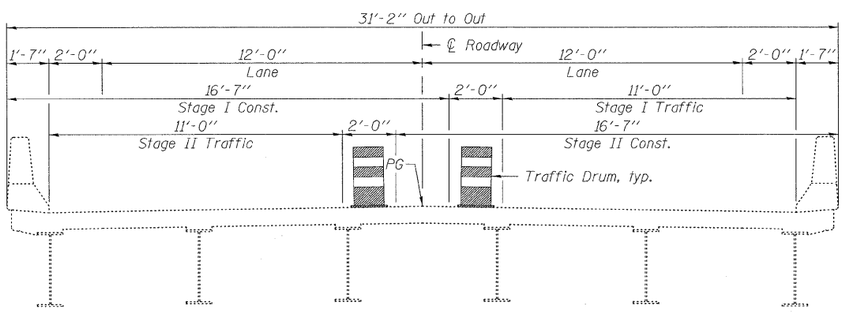

CROSS SECTION

(Looking South)

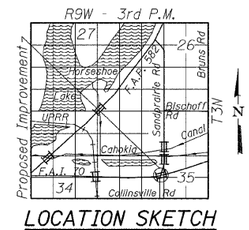

LOCATION SKETCH

TOTAL BILL OF MATERIAL

ITEM	UNIT	SUPER	SUB	TOTAL
Concrete Sealer	Sq. Ft.	18,694		18,694

GENERAL PLAN
SAND PRAIRIE ROAD OVER I-70
F.A.U. RTE. 9108
SEC. DIST. 8 BRIDGE DECK 2011-3
MADISON COUNTY
STATION 100+68.71
STRUCTURE NO. 060-0146

DESIGNED	---
CHECKED	---
DRAWN	KAK
CHECKED	EML

HORNER & SHIFRIN, INC.
ENGINEERS

SHEET NO. 1	F.A. RTE.	SECTION	COUNTY	TOTAL SHEETS	SHEET NO.
1 SHEETS	VAR.	DIST 8 BRIDGE DECK 2011-3	MADISON	29	24
			CONTRACT NO. 76E43		
		ILLINOIS	FED. AID PROJECT		