F.A.I. RTE.	SECTION	COUNTY	TOTAL SHEETS	SHEET NO.
55	(57-1, 57-2)BDS	MCLEAN	89	1
	ILLINOIS	CONTRACT NO. 70D64		

03-11-2022 LETTING ITEM 166

FOR INDEX OF SHEETS, SEE SHEET NO. 2
FOR LIST OF HIGHWAY STANDARDS, SHEET SHEET NO. 2
FOR SUMMARY OF QUANTITIES, SEE SHEET NO. 3-7

STATE OF ILLINOIS
DEPARTMENT OF TRANSPORTATION

PROPOSED HIGHWAY PLANS

FAI ROUTE 55 (I 55)
SECTION (57–1, 57–2)BDS
PROJECT NHPP–DM2U(328)
BRIDGE DECK OVERLAY
MCLEAN COUNTY

C–95–025–19

N OF LEXINGTON TO LIVINGSTON CO LINE

SN 057-0178 SB
SN 057-0179 NB
F.A.I. 55 (I-55) STA. 411+30
OVER TP&W RAILROAD
PROPOSED STRUCTURE REPAIRS

SN 057-0152 SB
SN 057-0153 NB
F.A.I. 55 (I-55) STA. 398+57
OVER US 24
PROPOSED STRUCTURE REPAIRS

STATION EQUATION
785+00.20 (BK) =
100+00.00 (AH)

SN 057-0173 SB
SN 057-0174 NB
F.A.I. 55 (I-55) STA. 781+50
OVER TURKEY CREEK
PROPOSED STRUCTURE REPAIRS

SN 057-0182 SB
SN 057-0183 NB
F.A.I. 55 (I-55) STA. 711+75
OVER TURKEY CREEK
PROPOSED STRUCTURE REPAIRS

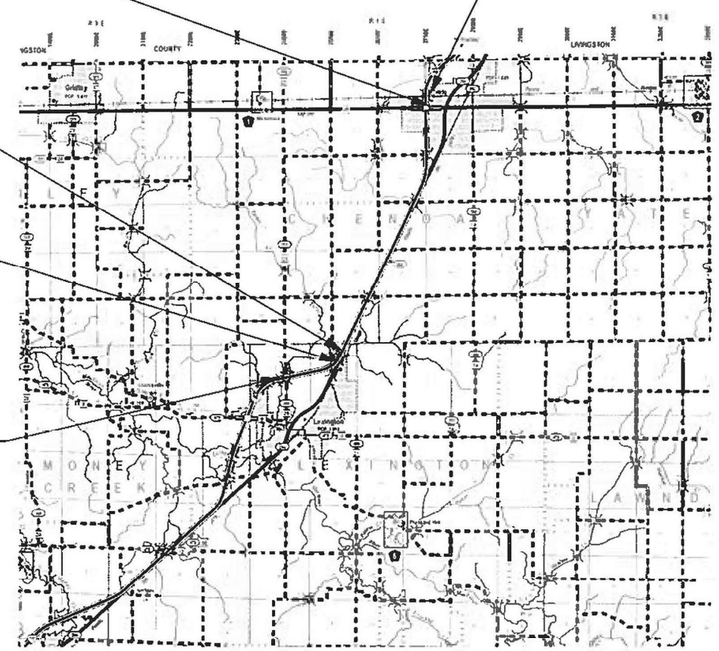

N

LOCATION MAP
NOT TO SCALE

GROSS LENGTH = 52,607.96 FT. = 9.96 MILE
NET LENGTH = FT. = MILE

D-95-020-19

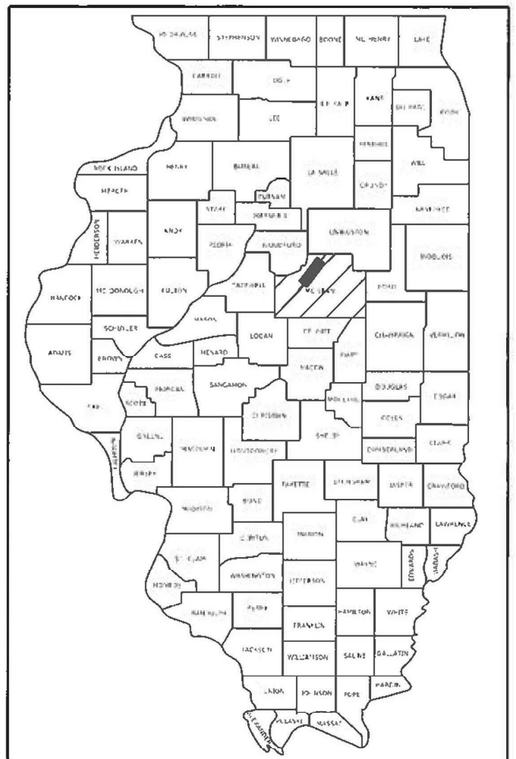

LOCATION OF SECTION INDICATED THUS:–

FUNCTIONAL CLASSIFICATION
PRINCIPAL ARTERIAL (INTERSTATE)

I-55 S. OF FAS 473	I-55 - FAS 473 TO US 24	I-55 - US 24 TO LIVINGSTON COUNTY LINE
2019 ADT = 24,300	2019 ADT = 26,600	2019 ADT = 24,400
P.V. = 72.1%	P.V. = 74.2%	P.V. = 74.9%
S.U.= 4.4%	S.U.= 4.4%	S.U.= 3.4%
M.U. = 23.5%	M.U. = 21.4%	M.U. = 21.7%

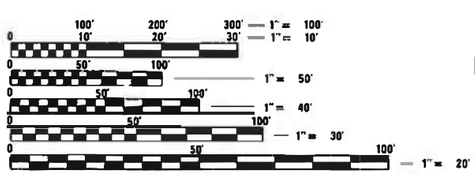

FULL SIZE PLANS HAVE BEEN PREPARED USING STANDARD ENGINEERING SCALES. REDUCED SIZED PLANS WILL NOT CONFORM TO STANDARD SCALES. IN MAKING MEASUREMENTS ON REDUCED PLANS, THE ABOVE SCALES MAY BE USED.

J.U.L.I.E.
JOINT UTILITY LOCATION INFORMATION FOR EXCAVATORS
1–800–892–0123
OR 811

TOWNSHIPS: MONEY CREEK, LEXINGTON, CHENOA

PROJECT ENGINEER JASON STULTS, P.E.
PROJECT MANAGER JASON GOBLE, P.E.
(217) 465–4181

CONTRACT NO. 70D64

CIVIL DESIGN, INC.
WBE / DBE
LICENSE #184.003222

STATE OF ILLINOIS
ROBERT HANFLAND
NUMBER 062.064104
PROFESSIONAL ENGINEER
10/21/2021

SHEETS 1–20, 87–88
ROBERT HANFLAND, PE
STATE OF ILLINOIS NO. 062–064104
EXPIRES 11–30–2021

STATE OF ILLINOIS
DEPARTMENT OF TRANSPORTATION

SUBMITTED 10/22, 2021
Kensil A. Samuthaw
REGIONAL ENGINEER

December 10, 2021
ENGINEER OF DESIGN AND ENVIRONMENT

December 10, 2021
Stephen M. Travis
DIRECTOR OF HIGHWAYS PROJECT IMPLEMENTATION

PRINTED BY THE AUTHORITY
OF THE STATE OF ILLINOIS

REV. 10/28/21

INDEX OF SHEETS

HIGHWAY STANDARDS

000001-08	STANDARD SYMBOLS, ABBREVIATIONS AND PATTERNS
001001-02	AREAS OF REINFORCEMENT BARS
001006	DECIMAL OF AN INCH AND OF A FOOT
421001-03	BAR REINFORCEMENT FOR CRC PAVEMENT
421201-07	24' CRC PAVEMENT (WITH LUG SYSTEM)
482001-02	HMA SHOULDER ADJACENT TO FLEXIBLE PAVEMENT
542401-04	METAL FLARED END SECTION FOR PIPE CULVERTS
642001-03	SHOULDER RUMBLE STRIPS, 16 IN.
701101-05	OFF-ROAD OPERATIONS, MULTILANE, 15' TO 24" FROM PAVEMENT EDGE
701106-02	OFF-ROAD OPERATIONS, MULTILANE, MORE THAN 15' (4.5 M) AWAY
701400-11	APPROACH TO LANE CLOSURE, FREEWAY/EXPRESSWAY
701402-12	LANE CLOSURE, FREEWAY/EXPRESSWAY, WITH BARRIER
701411-09	LANE CLOSURE, MULTILANE, AT ENTRANCE OR EXIT RAMP, FOR SPEEDS > 45 MPH
701428-01	TRAFFIC CONTROL, SETUP AND REMOVAL, FREEWAY/EXPRESSWAY
701451-05	RAMP CLOSURE FREEWAY/EXPRESSWAY
701601-09	URBAN LANE CLOSURE MULTILANE, 1W OR 2W WITH NONTRAVERSABLE MEDIAN
701901-08	TRAFFIC CONTROL DEVICES
704001-08	TEMPORARY CONCRETE BARRIER
780001-05	TYPICAL PAVEMENT MARKINGS
701426-09	LANE CLOSURE,MULTILANE,INTERMITTENT OR MOVING OPER.,FOR SPEEDS >/= 45 MPH

COMMITMENTS

THERE ARE NO COMMITMENTS

GENERAL NOTES

G.N.-105.09A
ALL ELEVATIONS SHOWN IN THE PLANS ARE BASED ON NORTH AMERICAN VERTICAL DATUM OF 1988. (NAVD 88)

G.N.-107.12
THE NAME, ADDRESS AND TELEPHONE NUMBER OF THE LOCAL RAILROAD CONTACT IS:
MR. JOSH THOMOS
ROADMASTER TOLEDO, PEORIA AND WESTERN RAILWAY
1990 EAST WASHINGTON STREET
EAST PEORIA, IL 61611
(309) 303-9404

SPECIAL ATTENTION IS CALLED TO ARTICLE 107.12 REGARDING RAILROAD FLAGGERS. THE NAME, ADDRESS AND TELEPHONE NUMBER OF THE RAILROAD FLAGGER CONTACT IS:

G.N. -406H

MIXTURE REQUIREMENTS

THE FOLLOWING MIXTURE REQUIREMENTS ARE APPLICABLE FOR THIS PROJECT:

Location	FAI 55	FAI 55	FAI 55
Mixture Use	Mainline Shoulder Binder (Bottom 12.0")	Mainline Shoulder Surface (Top 2.0")	Stabilized Subbase
AC/PG	PG 64-22	PG 64-22	PG 64-22
Design Air Voids	4.0% @ Ndes=90	4.0% @ Ndes=90	4.0% @ Ndes=50
Mix Comp(Gradation)	IL 19.0	IL 9.5	IL 19.0
Friction Aggregate	N.A.	Mix D	N.A.
Mixture Weight	112	112	112
Quality Management Program	QC/QA	QC/QA	QC/QA
Sublot Size	N.A.	N.A.	N.A.
Material Transfer Device (Required ?)	No	No	No

G.N.-440B
THE EXISTING TIE BARS BETWEEN THE EXISTING PAVEMENT AND EXISTING MEDIANS, GUTTERS AND/OR COMBINATION CURB AND GUTTERS THAT ARE FOUND SUITABLE FOR REUSE SHALL BE CLEANED, STRAIGHTENED AND INCORPORATED INTO THE NEW CONSTRUCTION. ANY EXISTING TIE BARS THAT ARE FOUND UNSUITABLE TO BE INCORPORATED INTO THE PROPOSED CONSTRUCTION DUE TO EXCESSIVE RUSTING OR DISTRESS SHALL BE REMOVED FLUSH WITH THE FACE OF THE EXISTING CONCRETE AND DISPOSED OF OUTSIDE THE LIMITS OF THE RIGHT-OF-WAY IN ACCORDANCE WITH ARTICLE 202.03 OF THE STANDARD SPECIFICATIONS.

THIS WORK WILL NOT BE PAID FOR SEPARATELY BUT SHALL BE CONSIDERED INCLUDED IN THE VARIOUS REMOVAL PAY ITEMS AND NO ADDITIONAL COMPENSATION WILL BE ALLOWED.

G.N.- 703A
SHORT TERM PAVEMENT MARKING SHALL BE APPLIED TO THE PAVEMENT AFTER ANY OF THE FOLLOWING: COLD MILLING AND/OR PLACING BITUMINOUS MATERIALS (TACK COAT), LEVELING BINDER (MACHINE METHOD), BINDER AND SURFACE COURSES. SHORT TERM PAVEMENT MARKING PLACED ON THE SURFACE SHALL COINCIDE WITH THE FINAL PAVEMENT STRIPING. SHORT TERM PAVEMENT MARKING PLACED PRIOR TO THE SURFACE SHALL COINCIDE WITH THE EXISTING PAVEMENT MARKINGS. USE 4 FEET PER 40 FEET (OR 10% PER STATION).

G.N.- 781
THE FINAL PAVEMENT MARKINGS SHALL BE IN PLACE PRIOR TO PLACING THE RAISED REFLECTIVE PAVEMENT MARKERS.

SYNTHETIC FIBERS SHALL BE INCLUDED IN THE BRIDGE DECK CONCRETE OVERLAY SPECIFIED. SEE SPECIAL PROVISIONS

CODE NO.	ITEM	UNIT	MCLEAN CO. FAI 55 (I-55) RURAL INTERSTATE STRUCTURE NO. 90% FED 10% STATE 0059 TOTAL QUANTITY	MCLEAN CO. FAI 55 (I-55) RURAL INTERSTATE STRUCTURE NO. 90% FED 10% STATE 057-0152 057-0153 QUANTITY	MCLEAN CO. FAI 55 (I-55) RURAL INTERSTATE STRUCTURE NO. 90% FED 10% STATE 057-0173 057-0174 QUANTITY	MCLEAN CO. FAI 55 (I-55) RURAL INTERSTATE STRUCTURE NO. 90% FED 10% STATE 057-0178 057-0179 QUANTITY	MCLEAN CO. FAI 55 (I-55) RURAL INTERSTATE STRUCTURE NO. 90% FED 10% STATE 057-0182 057-0183 QUANTITY
20200100	EARTH EXCAVATION	CU YD	248			248	
28100107	STONE RIPRAP, CLASS A4	SQ YD	405			405	
28200200	FILTER FABRIC	SQ YD	405			405	
31200500	STABILIZED SUBBASE - HOT-MIX ASPHALT, 4"	SQ YD	970		762		208
40600275	BITUMINOUS MATERIALS (PRIME COAT)	POUND	1,300		1,022		278
42100380	CONTINUOUSLY REINFORCED PORTLAND CEMENT CONCRETE PAVEMENT 14"	SQ YD	866		681		185
40800029	BITUMINOUS MATERIALS (TACK COAT)	POUND	3,323	415	1,224	810	874
42100615	PAVEMENT REINFORCEMENT	SQ YD	866		681		185
42101300	PROTECTIVE COAT	SQ YD	9,499	3,259	1,560	2,080	2,600
44000100	PAVEMENT REMOVAL	SQ YD	866		681		185
44000157	HOT-MIX ASPHALT SURFACE REMOVAL, 2"	SQ YD	6,240	922	1,813	1,810	1,695
44000300	CURB REMOVAL	FOOT	37		17		20
44004250	PAVED SHOULDER REMOVAL	SQ YD	578		454		124
48101498	AGGREGATE SHOULDERS, TYPE B 4"	SQ YD	217		170		47
48102100	AGGREGATE WEDGE SHOULDER, TYPE B	TON	95	16	29	26	24
48203053	HOT-MIX ASPHALT SHOULDERS, 14"	SQ YD	578		454		124

* SPECIALTY ITEM

CODE NO.	ITEM	UNIT	MCLEAN CO. FAI 55 (I-55) RURAL INTERSTATE STRUCTURE NO. 90% FED 10% STATE 0059 TOTAL QUANTITY	MCLEAN CO. FAI 55 (I-55) RURAL INTERSTATE STRUCTURE NO. 90% FED 10% STATE 057-0152 057-0153 QUANTITY	MCLEAN CO. FAI 55 (I-55) RURAL INTERSTATE STRUCTURE NO. 90% FED 10% STATE 057-0173 057-0174 QUANTITY	MCLEAN CO. FAI 55 (I-55) RURAL INTERSTATE STRUCTURE NO. 90% FED 10% STATE 057-0178 057-0179 QUANTITY	MCLEAN CO. FAI 55 (I-55) RURAL INTERSTATE STRUCTURE NO. 90% FED 10% STATE 057-0182 057-0183 QUANTITY
48203100	HOT-MIX ASPHALT SHOULDERS	TON	698	103	203	202	190
50102400	CONCRETE REMOVAL	CU YD	156.9	98.8	10.3	7.6	40.2
50105220	PIPE CULVERT REMOVAL	FOOT	134			134	
50157300	PROTECTIVE SHIELD	SQ YD	1,150	748		402	
50300100	FLOOR DRAINS	EACH	56	8	8		40
50300225	CONCRETE STRUCTURES	CU YD	35.9	35.9			
50300255	CONCRETE SUPERSTRUCTURE	CU YD	130.1	72.0	10.3	7.6	40.2
50500405	FURNISHING AND ERECTING STRUCTURAL STEEL	POUND	14,250	8,190			6,060
50500505	STUD SHEAR CONNECTORS	EACH	954	594			360
50800205	REINFORCEMENT BARS, EPOXY COATED	POUND	22,360	20,100		700	1,560
50800515	BAR SPLICERS	EACH	184	136		16	32
52000005	PREFORMED JOINT SEAL, 1"	FOOT	685	195	160	160	170
52000110	PREFORMED JOINT STRIP SEAL	FOOT	557	197		176	184
54213447	END SECTIONS 12"	EACH				2	

* SPECIALTY ITEM

CODE NO.	ITEM	UNIT	MCLEAN CO. FAI 55 (I-55) RURAL INTERSTATE STRUCTURE NO. 90% FED 10% STATE 0059 TOTAL QUANTITY	MCLEAN CO. FAI 55 (I-55) RURAL INTERSTATE STRUCTURE NO. 90% FED 10% STATE 057-0152 057-0153 QUANTITY	MCLEAN CO. FAI 55 (I-55) RURAL INTERSTATE STRUCTURE NO. 90% FED 10% STATE 057-0173 057-0174 QUANTITY	MCLEAN CO. FAI 55 (I-55) RURAL INTERSTATE STRUCTURE NO. 90% FED 10% STATE 057-0178 057-0179 QUANTITY	MCLEAN CO. FAI 55 (I-55) RURAL INTERSTATE STRUCTURE NO. 90% FED 10% STATE 057-0182 057-0183 QUANTITY
60100945	PIPE DRAINS 12"	FOOT	14			14	
60600605	CONCRETE CURB, TYPE B	FOOT	37		17		20
64200116	SHOULDER RUMBLE STRIPS, 16 INCH	FOOT	7,410	1,220	2,271	2,031	1,888
67000400	ENGINEERS FIELD OFFICE, TYPE A	CAL MO	12	3	3	3	3
67100100	MOBILIZATION	L SUM	1	0.25	0.25	0.25	0.25
70100207	TRAFFIC CONTROL AND PROTECTION, STANDARD 701402	EACH	8	2	2	2	2
70100420	TRAFFIC CONTROL AND PROTECTION, STANDARD 701411	EACH	3	3			
70100820	TRAFFIC CONTROL AND PROTECTION, STANDARD 701451	L SUM	1	1			
70102630	TRAFFIC CONTROL AND PROTECTION, STANDARD 701601	L SUM	1	1			
70107005	PAVEMENT MARKING BLACKOUT TAPE, 5"	FOOT	10,642	2,766	2,763	2,104	3,009
70107025	CHANGEABLE MESSAGE SIGN	CAL DA	300	75	75	75	75
70300221	TEMPORARY PAVEMENT MARKING - LINE 4"	FOOT	24,177	5,855	6,398	5,798	6,126
70400100	TEMPORARY CONCRETE BARRIER	FOOT	4,075	1,025	1,025	962	1,063
70400125	PINNING TEMPORARY CONCRETE BARRIER	EACH	36		24		12

* SPECIALTY ITEM

CODE NO.	ITEM	UNIT	MCLEAN CO. FAI 55 (I-55) RURAL INTERSTATE STRUCTURE NO. 90% FED 10% STATE 0059 TOTAL QUANTITY	MCLEAN CO. FAI 55 (I-55) RURAL INTERSTATE STRUCTURE NO. 90% FED 10% STATE 057-0152 057-0153 QUANTITY	MCLEAN CO. FAI 55 (I-55) RURAL INTERSTATE STRUCTURE NO. 90% FED 10% STATE 057-0173 057-0174 QUANTITY	MCLEAN CO. FAI (I-55) RURAL INTERSTATE STRUCTURE NO. 90% FED 10% STATE 057-0178 057-0179 QUANTITY	MCLEAN CO. FAI 55 (I-55) RURAL INTERSTATE STRUCTURE NO. 90% FED 10% STATE 057-0182 057-0183 QUANTITY
70400200	RELOCATE TEMPORARY CONCRETE BARRIER	FOOT	3,863	1,000	975	863	1,025
70600260	IMPACT ATTENUATORS, TEMPORARY (FULLY REDIRECTIVE,NARROW), TEST LEVEL 3	EACH	8	2	2	2	2
70600330	IMPACT ATTENUATORS, RELOCATE (FULLY REDIRECTIVE), TEST LEVEL 3)	EACH	8	2	2	2	2
* 78008330	POLYUREA PAVEMENT MARKING TYPE II - LINE 6"	FOOT	14,215	3,398	3,703	3,334	3,780
* 78011035	GROOVING FOR RECESSED PAVEMENT MARKING 7"	FOOT	14,215	3,398	3,703	3,334	3,780
78300201	PAVEMENT MARKING REMOVAL - GRINDING	SQ FT	6,651	1,629	1,736	1,640	1,646
X0322194	POLYMER MODIFIED PORTLAND CEMENT MORTAR	SQ FT	1,938		562		1,376
X0326223	FOAM, EXPANDING POLYURETHANE, HIGH-DENSITY	POUND	24,000			24,000	
X0550300	SLOPEWALL BREAKING	SQ YD	667			667	
X2700001	TEMPORARY RUMBLE STRIPS (SPECIAL)	EACH	64	16	16	16	16
X2810708	STONE DUMPED RIPRAP, CLASS A4 (SPECIAL)	SQ YD	667			667	
X5030250	BRIDGE DECK GROOVING (LONGITUDINAL)	SQ YD	5,527	2,077.0	896	1,150	1,404
X7200201	WIDTH RESTRICTION SIGNING	L SUM	1	0.25	0.25	0.25	0.25

* SPECIALTY ITEM

MODEL: Default
FILE NAME: P:\Effingham\3454 - PTB 189 IDOT D5 V-V\Work Order #6\Cadd\Sheet\0570912_sht_SQQ.dgn

CDI CIVIL DESIGN,INC. WBE / DBE EFFINGHAM, IL LICENSE #184.003222

USER NAME = abohnhoff	DESIGNED - WMK	REVISED -	
	DRAWN - DMM	REVISED -	
PLOT SCALE = 2.0000 ' / in.	CHECKED - RLH	REVISED -	
PLOT DATE = 10/22/2021	DATE - 10/22/2021	REVISED -	

STATE OF ILLINOIS
DEPARTMENT OF TRANSPORTATION

SUMMARY OF QUANTITIES

SCALE: N.T.S. | SHEET 3 OF 5 SHEETS | STA. | TO STA.

F.A.I. RTE.	SECTION	COUNTY	TOTAL SHEETS	SHEET NO.
55	(57-1,57-2)BDS	MCLEAN	88	5
		CONTRACT NO. 70D64		
		ILLINOIS FED. AID PROJECT		

REV. 12/9/21 REV. 10/28/21

CODE NO.	ITEM	UNIT	MCLEAN CO. FAI 55 (I-55) RURAL INTERSTATE STRUCTURE NO. 90% FED 10% STATE 0059 TOTAL QUANTITY	MCLEAN CO. FAI 55 (I-55) RURAL INTERSTATE STRUCTURE NO. 90% FED 10% STATE 057-0152 057-0153 QUANTITY	MCLEAN CO. FAI 55 (I-55) RURAL INTERSTATE STRUCTURE NO. 90% FED 10% STATE 057-0173 057-0174 QUANTITY	MCLEAN CO. FAI 55 (I-55) RURAL INTERSTATE STRUCTURE NO. 90% FED 10% STATE 057-0178 057-0179 QUANTITY	MCLEAN CO. FAI 55 (I-55) RURAL INTERSTATE STRUCTURE NO. 90% FED 10% STATE 057-0182 057-0183 QUANTITY
Z0001903	STRUCTURAL STEEL REMOVAL	POUND	14,250	8,190			6,060
Z0001905	STRUCTURAL STEEL REPAIR	POUND	6,880	6,880			
Z0006012	BRIDGE DECK LATEX CONCRETE OVERLAY, 2 1/4 INCHES	SQ YD	2,220	860		622	738
Z0006018	BRIDGE DECK LATEX CONCRETE OVERLAY, 3 INCHES	SQ YD	2,966	1,754		1,212	
Z0012140	BRIDGE DECK SCARIFICATION 2"	SQ YD	2,836	860	616	622	738
Z0012146	BRIDGE DECK SCARIFICATION 2 3/4"	SQ YD	2,966	1,754		1,212	
Z0012152	BRIDGE DECK SCARIFICATION 3 1/2"	SQ YD	2,239		805		1,434
Z0012162	BRIDGE DECK MICROSILICA OVERLAY, 2 1/4 INCHES	SQ YD	616		616		
Z0012754	STRUCTURAL REPAIR OF CONCRETE (DEPTH EQUAL TO OR LESS THAN 5 INCHES)	SQ FT	1,733	1,226	60	377	70
Z0013798	CONSTRUCTION LAYOUT	L SUM	1	0.25	0.25	0.25	0.25
Z0016001	DECK SLAB REPAIR (FULL DEPTH, TYPE I)	SQ YD	166	62	8	36	60
Z0016002	DECK SLAB REPAIR (FULL DEPTH, TYPE II)	SQ YD	4	4			
Z0016702	DETOUR SIGNING	L SUM	1	1			
Z0029090	DIAMOND GRINDING (BRIDGE SECTION)	SQ YD	7,591	2,607	1,288	1,678	2,018

* SPECIALTY ITEM

CODE NO.	ITEM	UNIT	MCLEAN CO. FAI 55 (I-55) RURAL INTERSTATE STRUCTURE NO. 90% FED 10% STATE 0059 TOTAL QUANTITY	MCLEAN CO. FAI 55 (I-55) RURAL INTERSTATE STRUCTURE NO. 90% FED 10% STATE 057-0152 057-0153 QUANTITY	MCLEAN CO. FAI 55 (I-55) RURAL INTERSTATE STRUCTURE NO. 90% FED 10% STATE 057-0173 057-0174 QUANTITY	MCLEAN CO. FAI 55 (I-55) RURAL INTERSTATE STRUCTURE NO. 90% FED 10% STATE 057-0178 057-0179 QUANTITY	MCLEAN CO. FAI 55 (I-55) RURAL INTERSTATE STRUCTURE NO. 90% FED 10% STATE 057-0182 057-0183 QUANTITY
Z0048665	RAILROAD PROTECTIVE LIABILITY INSURANCE	L SUM	1			1	
Z0006022	BRIDGE DECK LATEX CONCRETE OVERLAY, 3 3/4 INCHES	SQ YD	1,434				1,434
Z0012174	BRIDGE DECK MICROSILICA OVERLAY, 3 3/4 INCHES	SQ YD	805		805		
Ø Z0076600	TRAINEES	HOUR	1,500	1,500			
Ø Z0076604	TRAINEES - TRAINING PROGRAM GRADUATE	HOUR	1,500	1,500			

Ø 0042

* SPECIALTY ITEM

MODEL: Default
FILE NAME: P:\Effingham\3454 - PTB 189 IDOT D5 V-V\Work Order #6\CaddSheet\D570912 snt SOQ.dgn

CDI CIVIL DESIGN, INC. WBE / DBE EFFINGHAM, IL LICENSE #184.003222

USER NAME = abohnhoff	DESIGNED - WMK	REVISED -	
	DRAWN - DMM	REVISED -	
PLOT SCALE = 2.0000 ' / in.	CHECKED - RLH	REVISED -	
PLOT DATE = 10/22/2021	DATE - 10/22/2021	REVISED -	

STATE OF ILLINOIS
DEPARTMENT OF TRANSPORTATION

SUMMARY OF QUANTITIES

SCALE: N.T.S. | SHEET 5 OF 5 SHEETS | STA. TO STA.

F.A.I. RTE.	SECTION	COUNTY	TOTAL SHEETS	SHEET NO.
55	(57-1,57-2)BDS	MCLEAN	88	7
		CONTRACT NO. 70D64		
	ILLINOIS	FED. AID PROJECT		

REV. 11/15/21 REV. 10/28/21

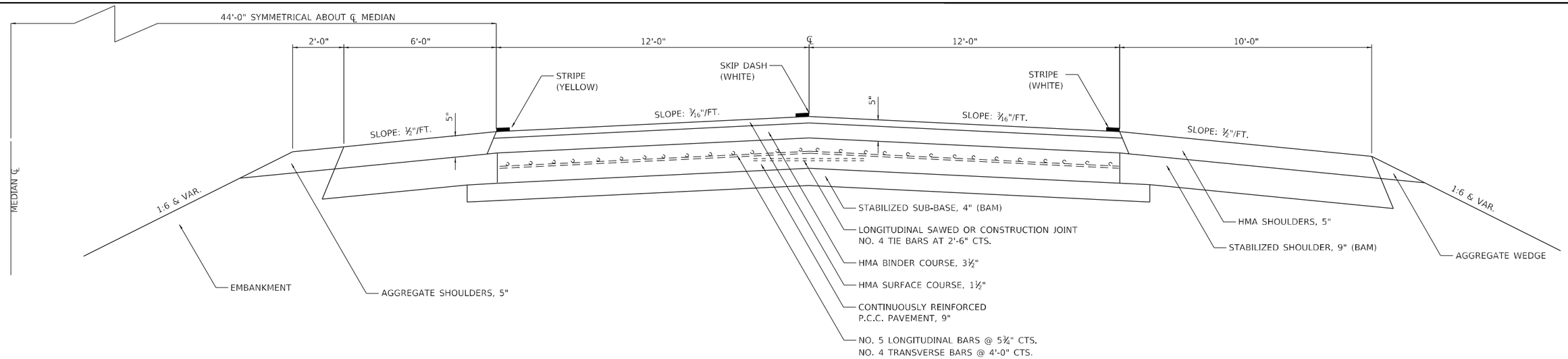

EXISTING TYPICAL CROSS SECTION

F.A.I. 55

SOUTHBOUND	NORTHBOUND
707+67.0 TO 710+62.0 (057-0182)	707+33.0 TO 710+27.0 (057-0183)
713+26.4 TO 715+99.3 (057-0182)	712+87.6 TO 714+97.0 (057-0183)
777+32.0 TO 780+64.0 (057-0173)	777+45.0 TO 780+67.54 (057-0174)
782+35.2 TO 100+53.0 (057+0173)	782+33.4 TO 100+70.0 (057-0174)
394+72.0 TO 397+23.7 (057+0152)	394+73.0 TO 397+23.7 (057-0153)
399+91.9 TO 402+54 (057-0152)	399+91.1 TO 402+63.0 (057-0153)
407+60.0 TO 410+18.6 (057-0178)	407+63.0 TO 410+20.5 (057-0179)
412+37.3 TO 414+99.0 (057-0178)	412+38.1 TO 415+06.0 (057-0179)

STA EQN 758+00.20 BK = 100+00.00 AH

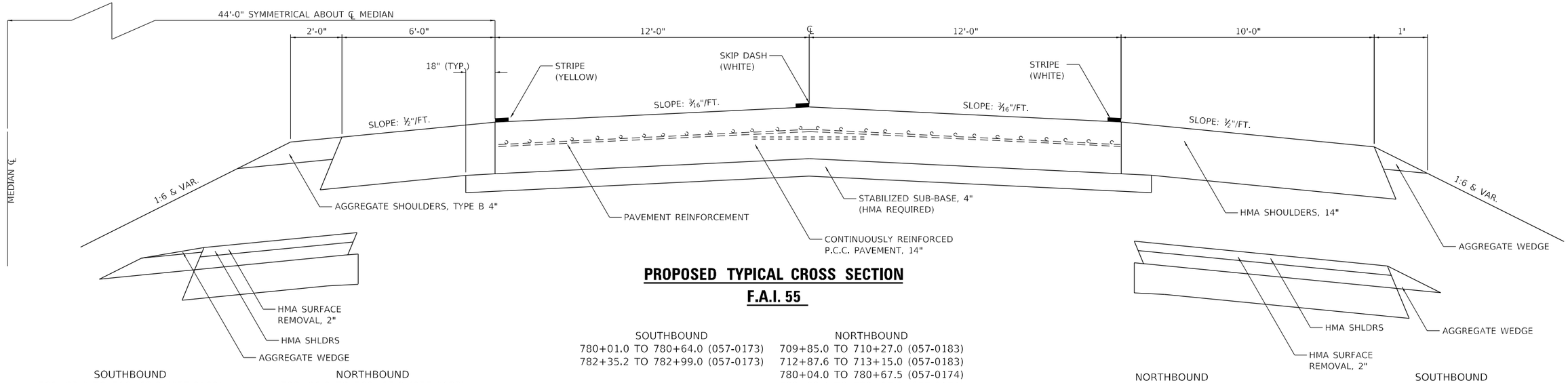

PROPOSED TYPICAL CROSS SECTION

F.A.I. 55

SOUTHBOUND	NORTHBOUND
780+01.0 TO 780+64.0 (057-0173)	709+85.0 TO 710+27.0 (057-0183)
782+35.2 TO 782+99.0 (057-0173)	712+87.6 TO 713+15.0 (057-0183)
	780+04.0 TO 780+67.5 (057-0174)
	782+33.4 TO 782+97.0 (057-0174)

SOUTHBOUND	NORTHBOUND
708+83.0 TO 710+62.0 (057-0182)	708+06.0 TO 709+85.0 (057-0183)
713+26.4 TO 715+19.0 (057-0182)	713+15.0 TO 714+97.0 (057-0183)
777+47.0 TO 780+01.0 (057-0173)	777+68.0 TO 780+04.0 (057-0174)
782+99.0 TO 785+00.2 BK (057-0173)	782+97.0 785+00.2 BK (057-0174)
100+00.0 AH TO 100+44.0 (057-0173)	100+00.0 AH TO 100+22.0 (057-0174)
394+74.0 to 397+23.8 (057-0152)	394+75.0 TO 397+23.9 (057-0153)
399+91.7 TO 402+24.0 (057-0152)	399+91.1 TO 402+35.0 (057-0153)
407+60.0 TO 410+18.6(057-0178)	407+79.0 TO 410+20.5 (057-0179)
412+37.3 TO 414+73.0 (057-0178)	412+38.0 TO 415+06.0 (057-0179)

NORTHBOUND	SOUTHBOUND
707+33.0 TO 709+85.0 (057-0183)	707+67.0 TO 710+62.0 (057-0182)
713+15.0 TO 715+81.0 (057-0183)	713+26.4 TO 715+99.0 (057-0182)
777+45.0 TO 780+04.0 (057-0174)	777+32.0 TO 780+01.0 (057-0173)
782+97.0 785+00.2 BK (057-0174)	782+99.0 TO 785+00.2 BK (057-0173)
100+00.0 AH TO 100+70.0 (057-0174)	100+00.0 AH TO 100+53.0 (057-0173)
407+63.0 TO 410+20.5 (057-0179)	399+91.7 TO 402+37.0 (057-0152)
412+38.0 TO 414+92.00 (057-0179)	407+65.0 TO 410+18.6 (057-0178)
	412+37.3 TO 414+73.0 (057-0178)

PROPOSED SHOULDER WORK TO BE COMPLETED BEFORE SHIFTING TRAFFIC ONTO SHOULDER.

MODEL: Default
FILE NAME: P:\Effingham\3454 - PTB 189 IDOT DS VA\Work Order #6\Cadd\Sheet\0570D64_4ht_Typical_NB.dgn

CDI CIVIL DESIGN, INC. WBE / DBE EFFINGHAM, IL LICENSE #184.003222

USER NAME = rhanfland	DESIGNED - WMK	REVISED -	
	DRAWN - DMM	REVISED -	
PLOT SCALE = 40.0000 ' / in.	CHECKED - RLH	REVISED -	
PLOT DATE = 10/28/2021	DATE - 10/28/2021	REVISED -	

STATE OF ILLINOIS
DEPARTMENT OF TRANSPORTATION

TYPICAL CROSS SECTIONS

SCALE: N.T.S. | SHEET 1 OF 1 SHEETS | STA. TO STA.

F.A.I. RTE.	SECTION	COUNTY	TOTAL SHEETS	SHEET NO.
55	(57-1,57-2)BDS	MCLEAN	88	8
		CONTRACT NO. 70D64		
	ILLINOIS	FED. AID PROJECT		

	LOCATION	LENGTH	31200500 STABILIZED SUBBASE HMA 4"	40600275 BITUMINOUS MATERIALS (PRIME COAT)	40800029 BITUMINOUS MATERIALS (TACK COAT)	42100380 CONTINUOUSLY REINFORCED PCCP 14"	42100615 PAVEMENT REINFORCEMENT	42101300 PROTECTIVE COAT	48101498 AGGREGATE SHOULDERS TYPE B 4"	48102100 AGGREGAGE WEDGE SHOULDER	48203053 HMA SHOULDERS 14"	48203100 HMA SHOULDERS	64200116 SHOULDER RUMBLE STRIPS
		FEET	SQ YD		LB	SQ YD	SQ YD	SQ YD	SQ YD	TON	SQ YD	TON	FOOT
057-0182	707+67.0 TO 710+62.0 LT	295			147.5					3.8		36.7	295
	708+83.0 TO 710+62.0 LT	179			53.7					2.3		13.4	179
	713+26.4 TO 715+99.0 LT	272.6			136.3					3.5		33.9	272.6
	713+26.4 TO 715+19.0 LT	192.6			57.8					2.5		14.4	192.6
057-0183	707+33.0 TO 709+85.0 RT	252			126.0					3.3		31.4	252
	708+06.0 TO 709+85.0 RT	179			53.7					2.3		13.4	179
	709+85.0 TO 710+27.0 RT	42	126.0	168.1	67.2	112.0	112.0	112.0	28.0	0.5	74.7		42
	712+87.6 TO 713+15.0 RT	27.4	82.2	109.6	43.8	73.1	73.1	73.1	18.3	0.4	48.7		27.4
	713+15.0 TO 714+97.0 RT	182			54.6					2.3		13.6	182
	713+15.0 TO 715+81.0 RT	266			133.0					3.4		33.1	266
057-0173	777+32.0 TO 780+01.0 LT	269			134.5					3.5		33.5	269
	777+47.0 TO 780+01.0 LT	254			76.2					3.3		19	254
	780+01.0 TO 780+64.0 LT	63	189.0	252.0	100.8	168.0	168.0	168.0	42.0	0.8	112		63
	782+35.2 TO 782+99.0 LT	63.8	191.4	255.2	102.1	170.1	170.1	170.1	42.5	0.8	113.4		63.8
	782+99.0 TO 785+00.2 BK LT	201.2			100.6					2.6		25	201.2
	782+99.0 TO 785+00.2 BK LT	201.2			60.4					2.6		15	201.2
	100+00.0 AH TO 100+53.0 LT	53			26.5					0.7		6.6	53
	100+00.0 AH TO 100+44.0 LT	44			13.2					0.6		3.3	44
057-0174	777+45.0 TO 780+04.0 RT	259			129.5					3.3		32.2	259
	777+68.0 TO 780+04.0 RT	236			70.8					3		17.6	236
	780+04.0 TO 780+67.5 RT	65	195.0	260.1	104.0	173.3	173.3	173.3	43.3	0.8	115.6		65
	782+33.4 TO 782+97.0 RT	63.6	190.8	254.5	101.8	169.6	169.6	169.6	42.4	0.8	113.1		63.6
	782+97.0 785+00.2 BK RT	203.2			101.6					2.6		25.3	203.2
	782+97.0 785+00.2 BK RT	203.2			61.0					2.6		15.2	203.2
	100+00.0 AH TO 100+22.0 RT	22			6.6					0.3		1.6	22
	100+00.0 AH TO 100+70.0 RT	70			35.0					0.9		8.7	70
057-0152	394+74.0 to 397+23.8 LT	249.8			74.9					3.2		18.7	249.8
	399+91.7 TO 402+37.0 LT	245.3			122.7					3.2		30.5	245.3
	399+91.7 TO 402+24.0 LT	232.3			69.7					3		17.3	232.3
057-0153	394+75.0 TO 397+23.9 RT	248.9			74.7					3.2		18.6	248.9
	399+91.1 TO 402+35.0 RT	243.9			73.2					3.1		18.2	243.9
057-0178	407+60.0 TO 410+18.6 LT	258.6			77.6					3.3		19.3	258.6
	407+65.0 TO 410+18.6 LT	253.6			126.8					3.3		31.6	253.6
	412+37.3 TO 414+73.0 LT	235.7			117.9					3		29.3	235.7
	412+37.3 TO 414+99.0 LT	261.7			78.5					3.4		19.5	261.7
057-0179	407+63.0 TO 410+20.5 RT	257.5			128.8					3.3		32	257.5
	407+79.0 TO 410+20.5 RT	241.5			72.5					3.1		18	241.5
	412+38.0 TO 415+06.0 RT	268			80.4					3.5		20	268
	412+38.0 TO 414+92.00 RT	254			127.0					3.3		31.6	254
	TOTAL		974.4	1299.5	3322.9	866.1	866.1	866.1	216.5	95.4	577.5	697.5	7409.6
	USE		974	1300	3323	866	866	866	217	95	578	698	7410

LOCATION	X2700001 TEMPORARY RUMBLE STRIPS (SPECIAL)
	EACH
SN 057-0182 (SB)	8
SN 057-0183 (NB)	8
SN 057-173 (SB)	8
SN 057-174 (NB)	8
SN 057+0152 (SB)	8
SN 057+0153 (NB)	8
SN 057+0178 (SB)	8
SN 057-179 (NB)	8
TOTAL	64

LOCATION	20200100 EARTH EXCAVATION	28100107 STONE RIPRAP, CLASS A4	28200200 FILTER FABRIC	54213447 END SECTIONS 12"	60100945 PIPE DRAINS 12"
	CU YD	SQ YD	SQ YD	EACH	FOOT
410+22 RT	6.8	11.1	11.1		
410+22 LT	6.8	11.1	11.1		
410+40 LT	55.2	90.4	90.4	1	7
410+40 RT	54.8	89.6	89.6	1	7
412+31 LT	6.8	11.1	11.1		
412+31 RT	6.8	11.1	11.1		
412+35 LT	55.7	91.1	91.1		
412+35 RT	54.9	89.8	89.8		
TOTAL	247.8	405.3	405.3	2	14
USE	248	405	405	2	14

	LOCATION	LENGTH	44000100 PAVEMENT REMOVAL	44000300 CURB REMOVAL	44000157 HMA SURFACE REMOVAL, 2"	44004250 PAVED SHOULDER REMOVAL	50105220 PIPE CULVERT REMOVAL
		FEET	SQ YD	LF	SQ YD	SQ YD	LF
057-0182	712+88.0 TO 713+07.8 LT	20		20			
	707+67.0 TO 710+62.0 LT	295			327.8		
	708+83.0 TO 710+62.0 LT	179			119.3		
	713+26.4 TO 715+99.0 LT	272.6			302.9		
	713+26.4 TO 715+19.0 LT	192.6			128.4		
057-0183	707+33.0 TO 709+85.0 RT	252			280.0		
	708+06.0 TO 709+85.0 RT	179			119.3		
	709+85.0 TO 710+27.0 RT	42	112.0			74.7	
	712+87.6 TO 713+15.0 RT	27.4	73.1			48.7	
	713+15.0 TO 714+97.0 RT	182			121.3		
	713+15.0 TO 715+81.0 RT	266			295.6		
057-0173	777+32.0 TO 780+01.0 LT	269			298.9		
	777+47.0 TO 780+01.0 LT	254			169.3		
	780+01.0 TO 780+64.0 LT	63	168.0			112.0	
	782+35.2 TO 782+99.0 LT	63.8	170.1			113.4	
	782+99.0 TO 785+00.2 BK LT	201.2			223.6		
	782+99.0 TO 785+00.2 BK LT	201.2			134.1		
	100+00.0 AH TO 100+53.0 LT	53			58.9		
	100+00.0 AH TO 100+44.0 LT	44			29.3		
057-0174	777+45.0 TO 780+04.0 RT	259			287.8		
	777+68.0 TO 780+04.0 LT	236			157.3		
	780+04.0 TO 780+67.5 RT	65	173.3			115.6	
	782+33.4 TO 782+97.0 RT	63.6	169.6			113.1	
	782+97.0 785+00.2 BK RT	203.2			225.8		
	782+97.0 785+00.2 BK RT	203.2			135.5		
	100+00.0 AH TO 100+22.0 RT	22			14.7		
	100+00.0 AH TO 100+70.0 RT	70			77.8		
057-0152	394+74.0 to 397+23.8 LT	249.8			166.5		
	399+91.7 TO 402+37.0 LT	245.3			272.6		
	399+91.7 TO 402+24.0 LT	232.3			154.9		
057-0153	394+75.0 TO 397+23.9 RT	248.9			165.9		
	399+91.1 TO 402+35.0 RT	243.9			162.6		
057-0178	412+13 TO 412+31 LT	17		17			
	407+60.0 TO 410+18.6 LT	258.6			172.4		
	407+65.0 TO 410+18.6 LT	253.6			281.8		
	412+37.3 TO 414+99.0 LT	261.7			290.8		
	412+37.3 TO 414+73.0 LT	235.7			157.1		
	410+40.3 LT (057-0178)						67
057-0179	407+63.0 TO 410+20.5 RT	257.5			286.1		
	407+79.0 TO 410+20.5 RT	241.5			161.0		
	412+38.0 TO 415+06.0 RT	268			178.7		
	412+38.0 TO 414+92.00 RT	254			282.2		
	410+41.0 RT (057-0179)						67
	TOTAL		866.1	37	6240.2	577.5	134
	USE		866	37	6240	578	134

LOCATION	60600605 CONCRETE CURB TYPE B
	FOOT
712+88 TO 713+08 LT (057-0182)	20
412+13 TO 412+31 LT (057-0178)	17
TOTAL	37

LOCATION	70400100 TEMP CONCRETE BARRIER	70400200 REL TEMP CONCRETE BARRIER	70600260 IMP ATT TEMP FRN TL3	70600330 IMP ATT REL FRD TL3	70400125 PIN TEMP CONCRETE BARRIER
	FOOT	FOOT	EACH	EACH	FOOT
SN 057-0182 (SB)					
STAGE 1					
STA. 710+38.90 TO STA. 715+38.30	500		1		6
STAGE 2					
STA. 710+38.90 TO STA. 715+13.40		475		1	6
SN 057-0183 (NB)					
STAGE 1					
STA. 707+85.60 TO STA. 713+47.50	562.5		1		
STAGE 2					
STA. 707+98.00 TO STA. 713+47.50		550		1	
SN 057-173 (SB)					
STAGE 1					
STA. 779+69.20 TO STA. 784+98.20	525		1		6
STAGE 2					
STA. 779+69.20 TO STA. 784+98.30		525		1	6
SN 057-174 (NB)					
STAGE 1					
STA. 778+05.00 TO STA. 783+21.40	500		1		6
STAGE 2					
STA. 778+54.20 TO STA. 783+21.40		450		1	6
SN 057+0152 (SB)					
STAGE 1					
STA. 396+98.70 TO STA. 401+98.10	500		1		
STAGE 2					
STA. 396+98.70 TO STA. 402+10.60	12.5	500		1	
SN 057+0153 (NB)					
STAGE 1					
STA. 395+24.30 TO STA. 400+23.70	500		1		
STAGE 2					
STA. 395+11.80 TO STA. 400+23.70	12.5	500		1	
SN 057+0178 (SB)					
STAGE 1					
STA. 409+87.30 TO STA. 414+84.40	500		1		
STAGE 2					
STA. 409+87.30 TO STA. 414+22.30		425		1	
SN 057-179 (NB)					
STAGE 1					
STA. 408+08.70 TO STA. 412+70.50	462.5		1		
STAGE 2					
STA. 408+21.10 TO STA. 412+70.50		437.5		1	
TOTAL	4075	3862.5	8	8	36
USE	4075	3863	8	8	36

MODEL: Default
FILE NAME: P:\effingham\3454 - PTB 189 IDOT DS XA\Work Order #8\Cadd\Sheet\0057D912_sht_SCHEDULES.dgn

CIVIL DESIGN, INC.
WBE / DBE
EFFINGHAM, IL
LICENSE #184.003222

USER NAME = rhanfland	DESIGNED - WMK	REVISED - 12/1/2021	
	DRAWN - DMM	REVISED -	
PLOT SCALE = 2.0000 ' / in.	CHECKED - RLH	REVISED -	
PLOT DATE = 12/7/2021	DATE - 12/7/2021	REVISED -	

STATE OF ILLINOIS
DEPARTMENT OF TRANSPORTATION

SCHEDULE OF QUANTITIES

SHEET 2 OF 3 SHEETS STA. TO STA.

F.A.I. RTE.	SECTION	COUNTY	TOTAL SHEETS	SHEET NO.
55	(57-1,57-2)BDS	MCLEAN	88	10
		CONTRACT NO. 70D64		
	ILLINOIS	FED. AID PROJECT		

LOCATION	COLOR	70300221 TEMPORARY PAVEMENT MARKING - LINE 4" - PAINT	78300201 PAVEMENT MARKING REMOVAL GRINDING	70107005 PAVEMENT MARKING BLACKOUT TAPE, 5"
		FOOT	SQ FT	FOOT
SN 057-0182 (SB)				
STAGE 1				
STA. 707+67 TO STA. 715+99	YELLOW	833	190	833
STA. 707+67 TO STA. 715+99	WHITE	833	190	
STAGE 2				
STA. 708+83 TO STA. 715+20	YELLOW	691	230	
STA. 708+83 TO STA. 715+20	WHITE	691	230	637
SN 057-0183 (NB)				
STAGE 1				
STA. 707+33 TO STA. 715+81	YELLOW	848	173	848
STA. 707+33 TO STA. 715+81	WHITE	848	173	
STAGE 2				
STA. 707+98 TO STA. 714+97	YELLOW	691	230	
STA. 707+98 TO STA. 714+97	WHITE	691	230	691
SN 057-173 (SB)				
STAGE 1				
STA. 777+32 TO STA. 100+53	YELLOW	810	172	
STA. 777+32 TO STA. 100+53	WHITE	810	172	714
STAGE 2				
STA. 777+48 TO STA. 100+44	YELLOW	790	263	
STA. 777+48 TO STA. 100+44	WHITE	790	263	640
SN 057-174 (NB)				
STAGE 1				
STA. 777+45 TO STA. 100+70	YELLOW	836	179	
STA. 777+45 TO STA. 100+70	WHITE	836	179	742
STAGE 2				
STA. 777+68 TO STA. 100+22	YELLOW	763	254	
STA. 777+68 TO STA. 100+22	WHITE	763	254	667
SN 057+0152 (SB)				
STAGE 1				
STA. 394+72 TO STA. 402+37	YELLOW	765	166	
STA. 394+72 TO STA. 402+37	WHITE	521	33	583
STAGE 2				
STA. 394+74 TO STA. 402+54	YELLOW	1015	338	
STA. 394+74 TO STA. 402+54	WHITE	983	328	1134
SN 057+0153 (NB)				
STAGE 1				
STA. 394+73 TO STA. 402+63	YELLOW	789	174	
STA. 394+73 TO STA. 402+63	WHITE	262	84	291
STAGE 2				
STA. 394+75 TO STA. 402+35	YELLOW	760	253	
STA. 394+75 TO STA. 402+35	WHITE	760	253	758
SN 057+0178 (SB)				
STAGE 1				
STA. 407+65 TO STA. 414+73	YELLOW	709	162	
STA. 407+65 TO STA. 414+73	WHITE	709	162	529
STAGE 2				
STA. 407+60 TO STA. 414+99	YELLOW	740	247	
STA. 407+60 TO STA. 414+99	WHITE	740	247	560
SN 057-179 (NB)				
STAGE 1				
STA. 407+63 TO STA. 414+92	YELLOW	725	169	
STA. 407+63 TO STA. 414+92	WHITE	725	169	508
STAGE 2				
STA. 407+79 TO STA. 415+06	YELLOW	725	242	
STA. 407+79 TO STA. 415+06	WHITE	725	242	507
TOTAL		24177	6651	10642

LOCATION	78008330 POLYUREA PAVEMENT MARKING TYPE II, 6" FOOT			78011035 GROOVING FOR RECESSED PAVEMENT MARKING 7"
	SOLID YELLOW	SOLID WHITE	SKIP DASH WHITE	FOOT
SN 057-0182				
707+67 TO 715+99	832	832	208	1872
SN 057-0183				
707+33 TO 715+81	848	848	212	1908
SN 057-173				
777+32 TO 100+53 AH	821	821	205	1847
SN 057-174				
777+45 TO 100+70 AH	825	825	206	1856
SN 057+0152				
394+74 TO 402+24	750	750	188	1688
SN 057+0153				
394+75 TO 402+35	760	760	190	1710
SN 057+0178				
407+60 TO 414+99	739	739	185	1663
SN 057-179				
407+63 TO 415+06	743	743	185	1671
TOTAL	6318	6318	1579	14215
USE	14215			14215

S6, T25N, R4E

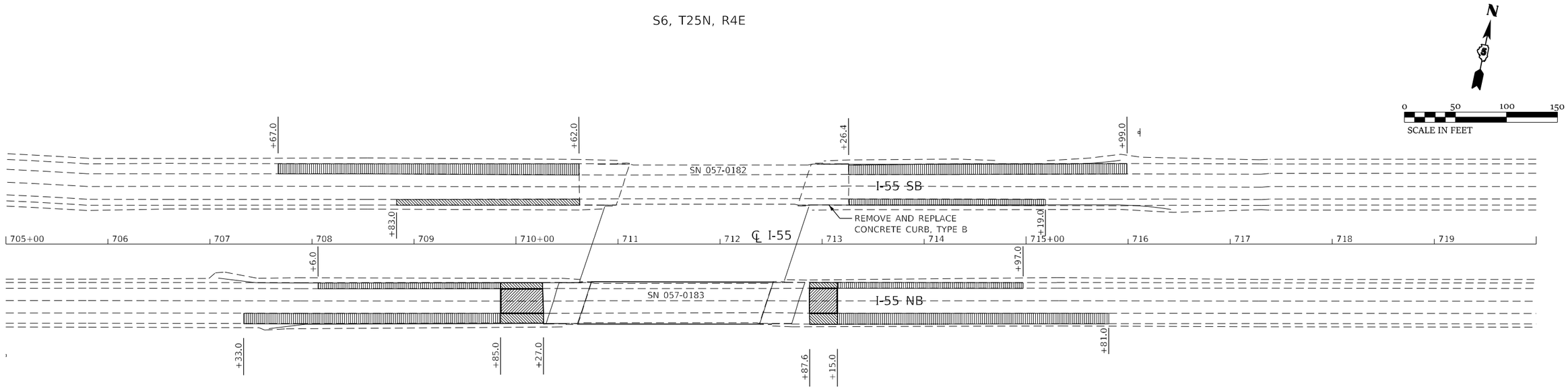

S5, T25N, R4E

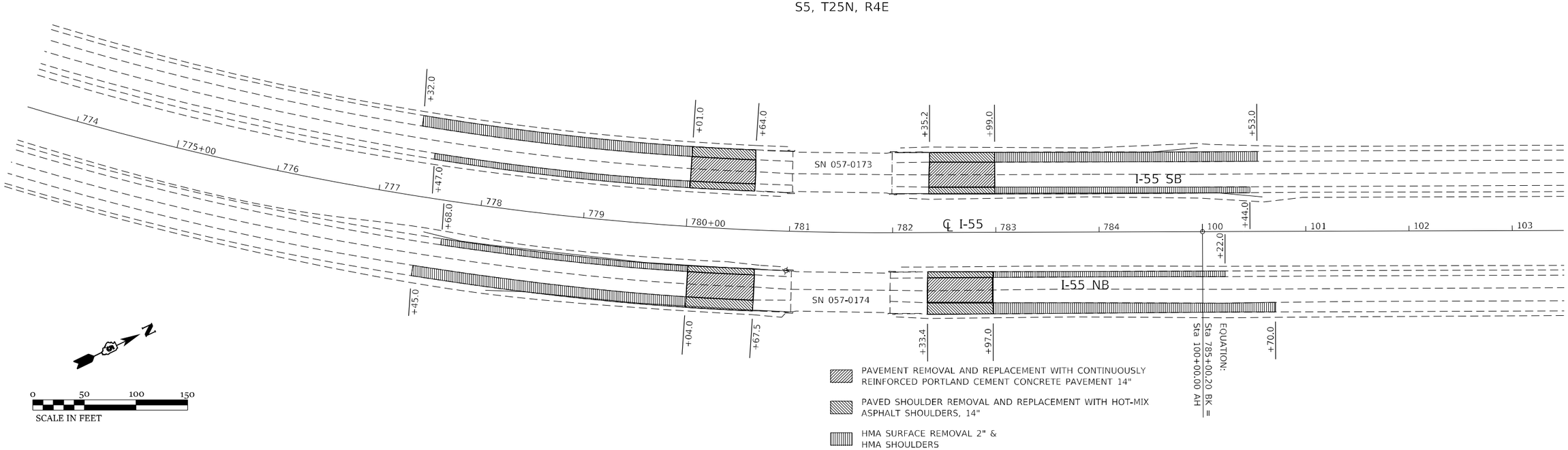

MODEL: D570912_plan4
FILE NAME: P:\Effingham\3454 - PTB 189 IDOT D5 V-V\Work Order #6\Cadd\Sheet\D570D64_HR_Plan1.dgn

CIVIL DESIGN, INC. WBE / DBE EFFINGHAM, IL LICENSE #184.003222	USER NAME = rhanfland	DESIGNED - WMK	REVISED -	STATE OF ILLINOIS DEPARTMENT OF TRANSPORTATION	I-55 PLAN SHEET	F.A.I. RTE.	SECTION	COUNTY	TOTAL SHEETS / SHEET NO.
		DRAWN - DMM	REVISED -			55	(57-1,57-2)BDS	MCLEAN	88 / 12
	PLOT SCALE = 100.0000 ' / in.	CHECKED - RLH	REVISED -					CONTRACT NO. 70D64	
	PLOT DATE = 10/28/2021	DATE - 10/28/2021	REVISED -		SCALE: 100.0000 ' / in. SHEET 1 OF 2 SHEETS STA. 705+00.00 TO STA. 103+50.00		ILLINOIS	FED. AID PROJECT	

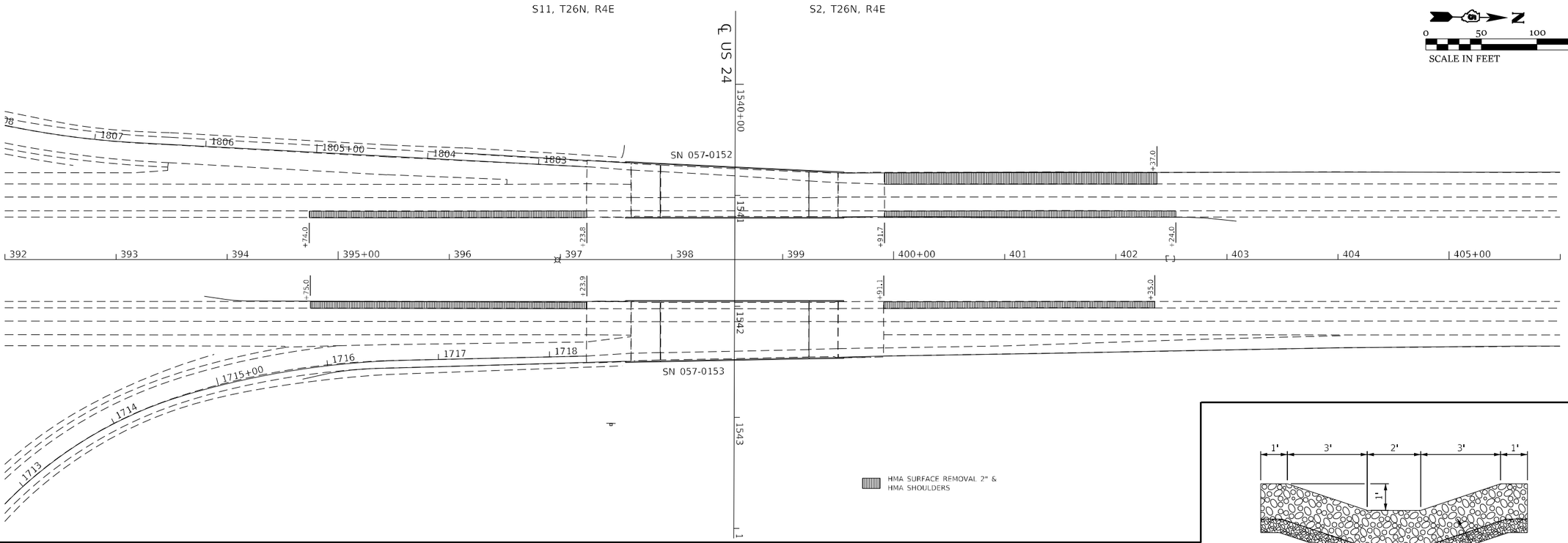

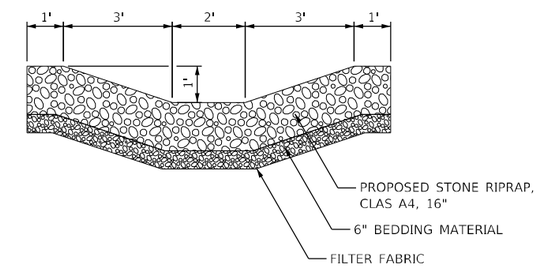

RIPRAP DITCH OUTLET SECTION

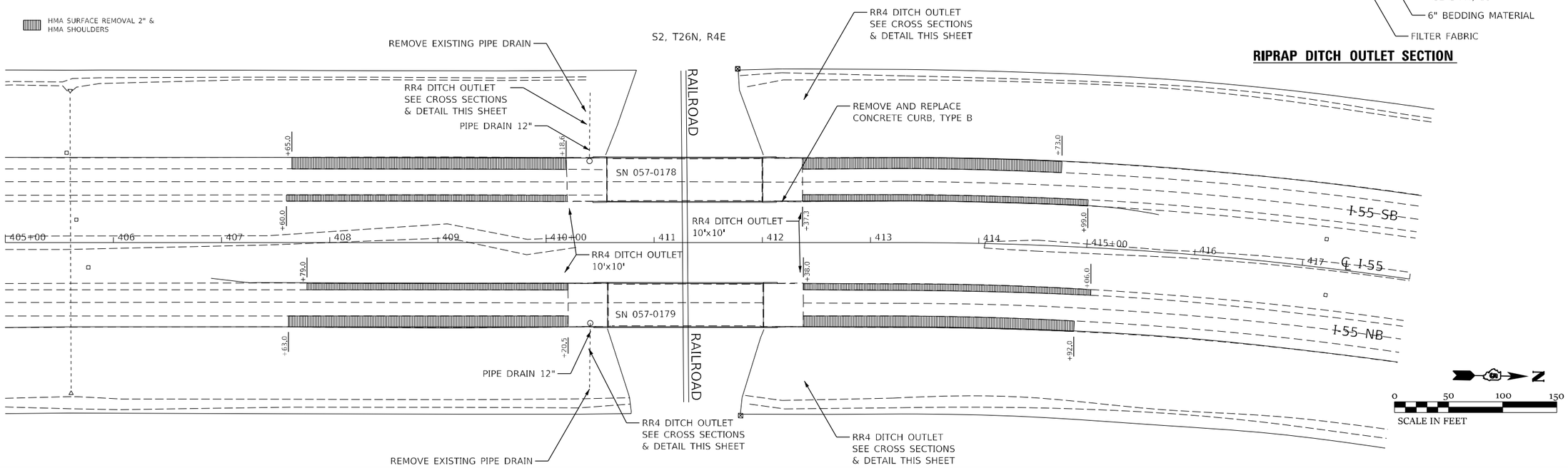

MODEL: D570912_Plan17
FILE NAME: P:\Effingham\3454 - PTB 189 IDOT DS V-V\Work Order #8\Cadd\Sheet\D570D64_Jht Plan2.dgn

CDI CIVIL DESIGN, INC. WBE / DBE EFFINGHAM, IL LICENSE #184.003222	USER NAME = rhanfland	DESIGNED - WMK	REVISED -	STATE OF ILLINOIS DEPARTMENT OF TRANSPORTATION	I-55 PLAN SHEET
		DRAWN - DMM	REVISED -		
	PLOT SCALE = 100.0000 ' / in.	CHECKED - RLH	REVISED -		
	PLOT DATE = 10/28/2021	DATE - 10/28/2021	REVISED -		SCALE: 100.0000 ' / in. SHEET 2 OF 2 SHEETS STA. 405+00 TO STA. 735+00.00

F.A.I. RTE.	SECTION	COUNTY	TOTAL SHEETS	SHEET NO.
55	(57-1,57-2)BDS	MCLEAN	88	13
		CONTRACT NO. 70D64		
	ILLINOIS	FED. AID PROJECT		

IF WORKING ON CONCURRENT STRUCTURES, DRUMS WITH STEADY BURN MONODIRECTIONAL LIGHTS AT 100' CENTERS SHALL BE USED PER HIGHWAY STANDARD 701402. ONLY DRUMS ALONG THE LANE SHIFTS AND 500' IN ADVANCE OF THE LANE SHIFTS WILL REQUIRE MONODIRECTIONAL LIGHTS. OTHER DRUMS ALONG THE TANGENT BETWEEN STRUCTURES WILL NOT REQUIRE LIGHTS. CHECK BARRICADES WILL BE REQUIRED EVERY 1000'. COST INCLUDED WITH TRAFFIC CONTROL AND PROTECTION STANDARD 701402.

TEMPORARY CONCRETE BARRIER LAYOUT – STAGE I
S.N. 057–0183 (NB) & S.N. 057–0182 (SB)

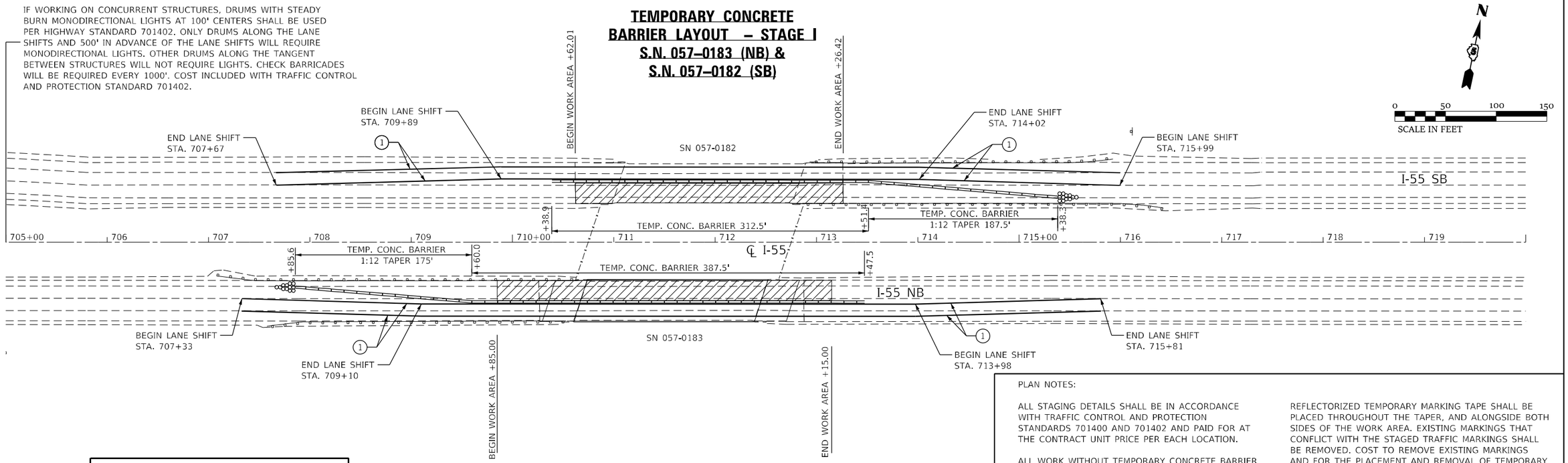

SYMBOLS	
	TEMPORARY CONCRETE BARRIER
	IMPACT ATTENUATOR
	WORK AREA
1	TEMPORARY PAVEMENT MARKINGS

PLAN NOTES:

ALL STAGING DETAILS SHALL BE IN ACCORDANCE WITH TRAFFIC CONTROL AND PROTECTION STANDARDS 701400 AND 701402 AND PAID FOR AT THE CONTRACT UNIT PRICE PER EACH LOCATION.

ALL WORK WITHOUT TEMPORARY CONCRETE BARRIER IN PLACE SHALL BE IN ACCORDANCE WITH TRAFFIC CONTROL AND PROTECTION STANDARDS 701400 AND 701401.

FOR ADDITIONAL DETAILS ASSOCIATED WITH TEMPORARY CONCRETE BARRRIER, SEE TRAFFIC CONTROL AND PROTECTION STANDARD 704001.

VERTICAL PANELS WITH LIGHTS AND REFLECTORS SHALL BE ATTACHED AT 25 FOOT CENTERS TO THE BARRIER WALL AND GUARDRAIL. COST INCLUDED WITH TRAFFIC CONTROL AND PROTECTION STANDARD 701402.

REFLECTORIZED TEMPORARY MARKING TAPE SHALL BE PLACED THROUGHOUT THE TAPER, AND ALONGSIDE BOTH SIDES OF THE WORK AREA. EXISTING MARKINGS THAT CONFLICT WITH THE STAGED TRAFFIC MARKINGS SHALL BE REMOVED. COST TO REMOVE EXISTING MARKINGS AND FOR THE PLACEMENT AND REMOVAL OF TEMPORARY MARKINGS SHALL BE INCLUDED WITH TRAFFIC CONTROL AND PROTECTION STANDARD 701402.

PRIOR TO ROUTING TRAFFIC ONTO THE SHOULDERS, THE CONTRACTOR SHALL SECURE ANY GRATES ON SHOULDER INLETS AS DIRECTED BY THE ENGINEER. THIS WORK SHALL BE PAID FOR ACCORDING TO ARTICLE 109.04 OF THE STANDAR SPECIFICATIONS.

PORTABLE CHANGEABLE MESSAGE SIGNS ARE REQUIRED SEVEN DAYS PRIOR TO CONSTRUCTION. THE RESIDENT ENGINEER OR TRAFFIC CONTROL SUPERVISOR SHALL PROVIDE AN APPROPRIATE MESSAGE.

TEMPORARY CONCRETE BARRIER LAYOUT – STAGE II
S.N. 057–0183 (NB) & S.N. 057–0182 (SB)

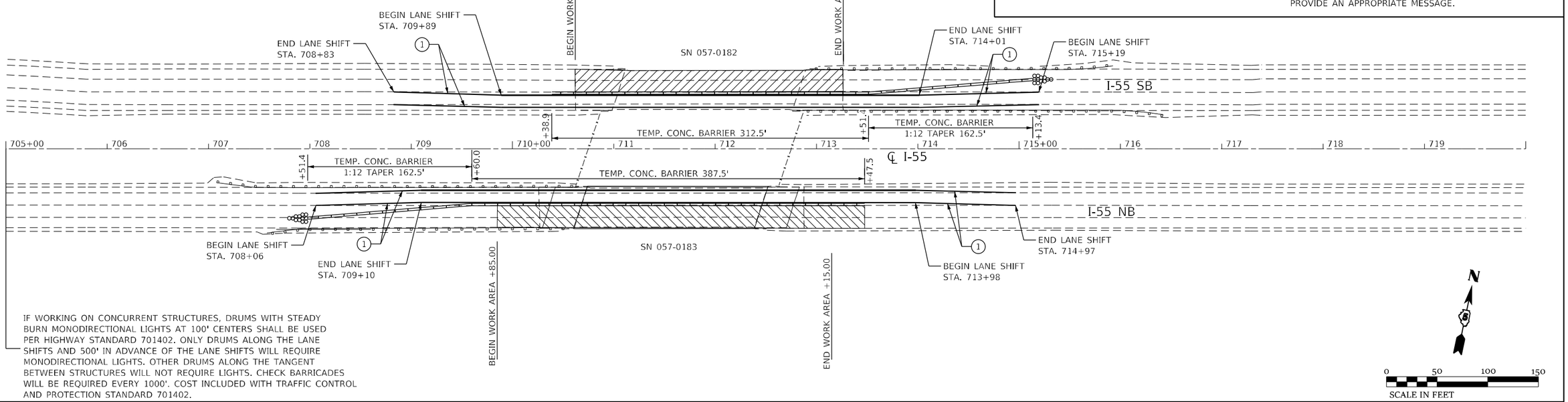

IF WORKING ON CONCURRENT STRUCTURES, DRUMS WITH STEADY BURN MONODIRECTIONAL LIGHTS AT 100' CENTERS SHALL BE USED PER HIGHWAY STANDARD 701402. ONLY DRUMS ALONG THE LANE SHIFTS AND 500' IN ADVANCE OF THE LANE SHIFTS WILL REQUIRE MONODIRECTIONAL LIGHTS. OTHER DRUMS ALONG THE TANGENT BETWEEN STRUCTURES WILL NOT REQUIRE LIGHTS. CHECK BARRICADES WILL BE REQUIRED EVERY 1000'. COST INCLUDED WITH TRAFFIC CONTROL AND PROTECTION STANDARD 701402.

MODEL: D570912_Plan4
FILE NAME: P:\Effingham\3454 - PPB 189 TIOT DS V-V\Work Order #8\Cadd\Sheet\D570064_GH_Staging_I_0813_0182.dgn

CDI CIVIL DESIGN, INC. WBE / DBE EFFINGHAM, IL LICENSE #184.003222

USER NAME = rhanfland	DESIGNED - WMK	REVISED -	
	DRAWN - DMM	REVISED -	
PLOT SCALE = 100.0000 ' / in.	CHECKED - RLH	REVISED -	
PLOT DATE = 10/21/2021	DATE - 10/21/2021	REVISED -	

STATE OF ILLINOIS
DEPARTMENT OF TRANSPORTATION

TEMPORARY CONCRETE BARRIER LAYOUT
S.N. 057–0182 SB & S.N. 057–0183 NB

SCALE: 100.0000 ' / in. | SHEET 4 OF 28 SHEETS | STA. 705+00.00 TO STA. 735+00.00

F.A.I. RTE.	SECTION	COUNTY	TOTAL SHEETS	SHEET NO.
55	(57-1,57-2)BDS	MCLEAN	88	14

CONTRACT NO. 70D64
ILLINOIS | FED. AID PROJECT

TEMPORARY CONCRETE BARRIER LAYOUT – STAGE I
S.N. 057–0174 (NB) & S.N. 057–0173 (SB)

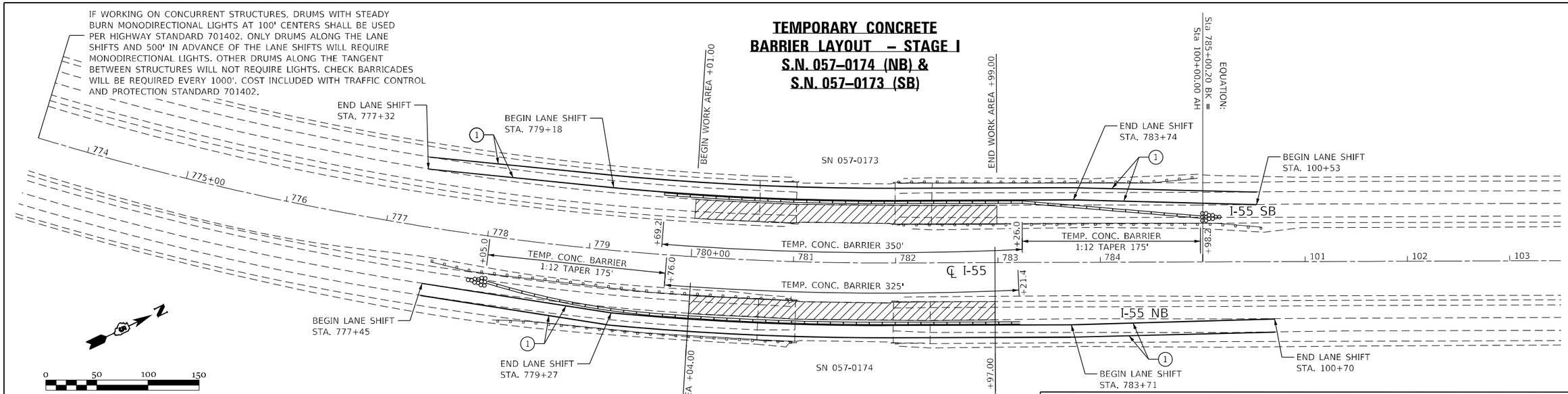

SYMBOLS	
	TEMPORARY CONCRETE BARRIER
	IMPACT ATTENUATOR
	WORK AREA
1	TEMPORARY PAVEMENT MARKINGS

PLAN NOTES:

ALL STAGING DETAILS SHALL BE IN ACCORDANCE WITH TRAFFIC CONTROL AND PROTECTION STANDARDS 701400 AND 701402 AND PAID FOR AT THE CONTRACT UNIT PRICE PER EACH LOCATION.

ALL WORK WITHOUT TEMPORARY CONCRETE BARRIER IN PLACE SHALL BE IN ACCORDANCE WITH TRAFFIC CONTROL AND PROTECTION STANDARDS 701400 AND 701401.

FOR ADDITIONAL DETAILS ASSOCIATED WITH TEMPORARY CONCRETE BARRRIER, SEE TRAFFIC CONTROL AND PROTECTION STANDARD 704001.

VERTICAL PANELS WITH LIGHTS AND REFLECTORS SHALL BE ATTACHED AT 25 FOOT CENTERS TO THE BARRIER WALL AND GUARDRAIL. COST INCLUDED WITH TRAFFIC CONTROL AND PROTECTION STANDARD 701402.

REFLECTORIZED TEMPORARY MARKING TAPE SHALL BE PLACED THROUGHOUT THE TAPER, AND ALONGSIDE BOTH SIDES OF THE WORK AREA. EXISTING MARKINGS THAT CONFLICT WITH THE STAGED TRAFFIC MARKINGS SHALL BE REMOVED. COST TO REMOVE EXISTING MARKINGS AND FOR THE PLACEMENT AND REMOVAL OF TEMPORARY MARKINGS SHALL BE INCLUDED WITH TRAFFIC CONTROL AND PROTECTION STANDARD 701402.

PRIOR TO ROUTING TRAFFIC ONTO THE SHOULDERS, THE CONTRACTOR SHALL SECURE ANY GRATES ON SHOULDER INLETS AS DIRECTED BY THE ENGINEER. THIS WORK SHALL BE PAID FOR ACCORDING TO ARTICLE 109.04 OF THE STANDAR SPECIFICATIONS.

PORTABLE CHANGEABLE MESSAGE SIGNS ARE REQUIRED SEVEN DAYS PRIOR TO CONSTRUCTION. THE RESIDENT ENGINEER OR TRAFFIC CONTROL SUPERVISOR SHALL PROVIDE AN APPROPRIATE MESSAGE.

TEMPORARY CONCRETE BARRIER LAYOUT – STAGE II
S.N. 057–0174 (NB) & S.N. 057–0173 (SB)

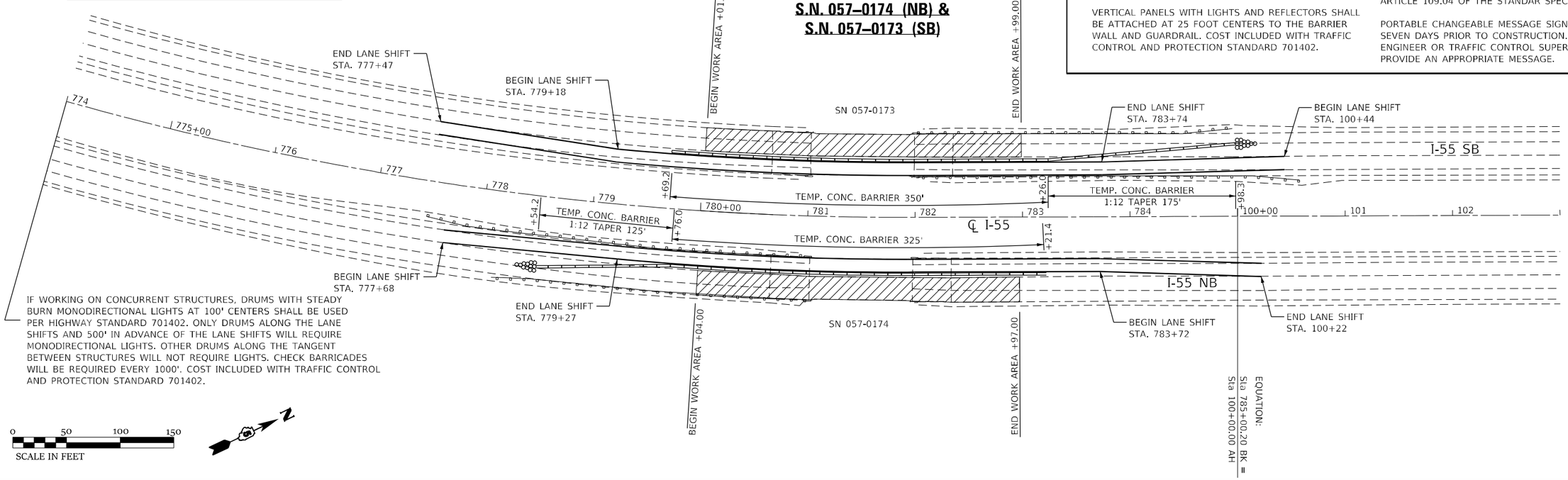

MODEL: D570912_Plan6
FILE NAME: P:\Effingham\3454 - PPB 189 TQST DS V-V\Work Order #8\Cadd\Sheet\D570D64_sht_Staging_2_0173_0174.dgn

CIVIL DESIGN, INC. WBE / DBE EFFINGHAM, IL LICENSE #184.003222	USER NAME = rhanfland	DESIGNED - WMK	REVISED -
		DRAWN - DMM	REVISED -
	PLOT SCALE = 100.0000 ' / in.	CHECKED - RLH	REVISED -
	PLOT DATE = 10/21/2021	DATE - 10/21/2021	REVISED -

STATE OF ILLINOIS
DEPARTMENT OF TRANSPORTATION

TEMPORARY CONCRETE BARRIER LAYOUT
S.N. 057–0173 SB & S.N. 057–0174 NB

SCALE: 100.0000 ' / in. | SHEET 1 OF 1 SHEETS | STA. 765+00.00 TO STA. 109+00.00

F.A.I. RTE.	SECTION	COUNTY	TOTAL SHEETS	SHEET NO.
55	(57-1,57-2)BDS	MCLEAN	88	15
		CONTRACT NO. 70D64		
	ILLINOIS	FED. AID PROJECT		

IF WORKING ON CONCURRENT STRUCTURES, DRUMS WITH STEADY BURN MONODIRECTIONAL LIGHTS AT 100' CENTERS SHALL BE USED PER HIGHWAY STANDARD 701402. ONLY DRUMS ALONG THE LANE SHIFTS AND 500' IN ADVANCE OF THE LANE SHIFTS WILL REQUIRE MONODIRECTIONAL LIGHTS. OTHER DRUMS ALONG THE TANGENT BETWEEN STRUCTURES WILL NOT REQUIRE LIGHTS. CHECK BARRICADES WILL BE REQUIRED EVERY 1000'. COST INCLUDED WITH TRAFFIC CONTROL AND PROTECTION STANDARD 701402.

TEMPORARY CONCRETE BARRIER LAYOUT – STAGE I
S.N. 057–0153 (NB) & S.N. 057–0152 (SB)

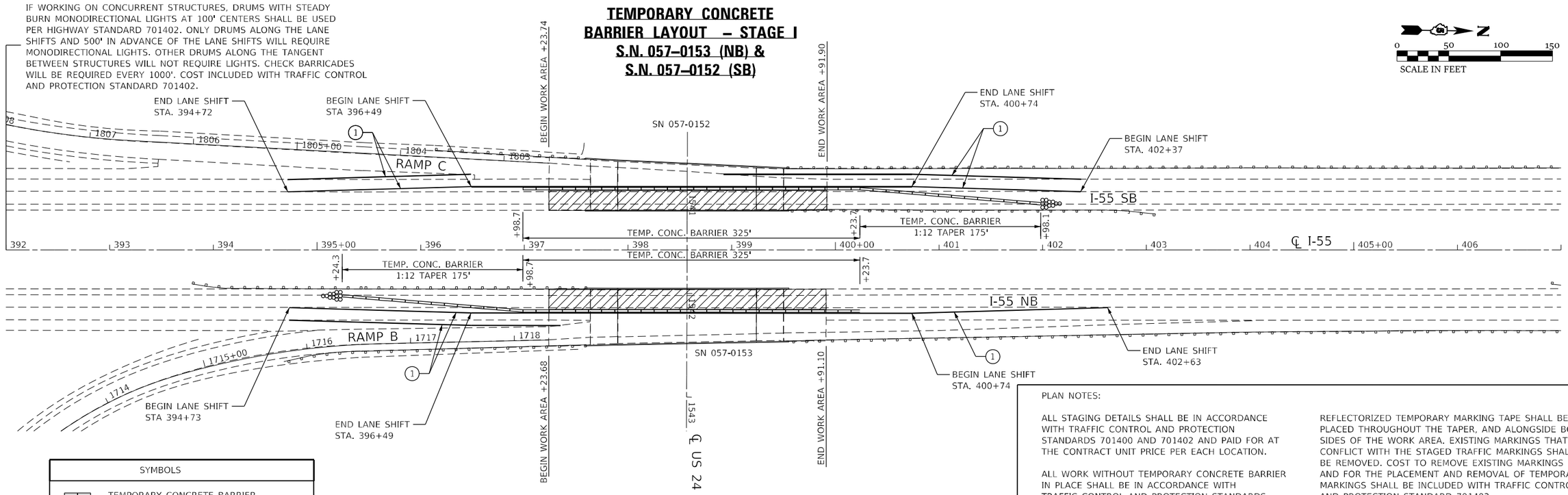

SYMBOLS

- TEMPORARY CONCRETE BARRIER
- IMPACT ATTENUATOR
- WORK AREA
- (1) TEMPORARY PAVEMENT MARKINGS

PLAN NOTES:

ALL STAGING DETAILS SHALL BE IN ACCORDANCE WITH TRAFFIC CONTROL AND PROTECTION STANDARDS 701400 AND 701402 AND PAID FOR AT THE CONTRACT UNIT PRICE PER EACH LOCATION.

ALL WORK WITHOUT TEMPORARY CONCRETE BARRIER IN PLACE SHALL BE IN ACCORDANCE WITH TRAFFIC CONTROL AND PROTECTION STANDARDS 701400 AND 701401.

FOR ADDITIONAL DETAILS ASSOCIATED WITH TEMPORARY CONCRETE BARRRIER, SEE TRAFFIC CONTROL AND PROTECTION STANDARD 704001.

VERTICAL PANELS WITH LIGHTS AND REFLECTORS SHALL BE ATTACHED AT 25 FOOT CENTERS TO THE BARRIER WALL AND GUARDRAIL. COST INCLUDED WITH TRAFFIC CONTROL AND PROTECTION STANDARD 701402.

REFLECTORIZED TEMPORARY MARKING TAPE SHALL BE PLACED THROUGHOUT THE TAPER, AND ALONGSIDE BOTH SIDES OF THE WORK AREA. EXISTING MARKINGS THAT CONFLICT WITH THE STAGED TRAFFIC MARKINGS SHALL BE REMOVED. COST TO REMOVE EXISTING MARKINGS AND FOR THE PLACEMENT AND REMOVAL OF TEMPORARY MARKINGS SHALL BE INCLUDED WITH TRAFFIC CONTROL AND PROTECTION STANDARD 701402.

PRIOR TO ROUTING TRAFFIC ONTO THE SHOULDERS, THE CONTRACTOR SHALL SECURE ANY GRATES ON SHOULDER INLETS AS DIRECTED BY THE ENGINEER. THIS WORK SHALL BE PAID FOR ACCORDING TO ARTICLE 109.04 OF THE STANDAR SPECIFICATIONS.

PORTABLE CHANGEABLE MESSAGE SIGNS ARE REQUIRED SEVEN DAYS PRIOR TO CONSTRUCTION. THE RESIDENT ENGINEER OR TRAFFIC CONTROL SUPERVISOR SHALL PROVIDE AN APPROPRIATE MESSAGE.

TEMPORARY CONCRETE BARRIER LAYOUT – STAGE II
S.N. 057–0153 (NB) & S.N. 057–0152 (SB)

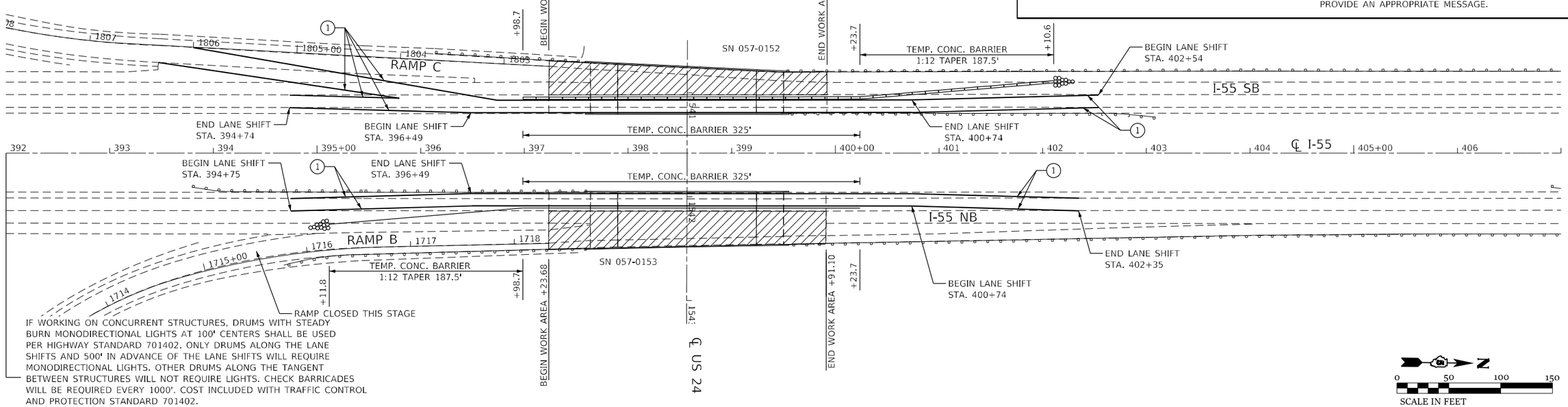

IF WORKING ON CONCURRENT STRUCTURES, DRUMS WITH STEADY BURN MONODIRECTIONAL LIGHTS AT 100' CENTERS SHALL BE USED PER HIGHWAY STANDARD 701402. ONLY DRUMS ALONG THE LANE SHIFTS AND 500' IN ADVANCE OF THE LANE SHIFTS WILL REQUIRE MONODIRECTIONAL LIGHTS. OTHER DRUMS ALONG THE TANGENT BETWEEN STRUCTURES WILL NOT REQUIRE LIGHTS. CHECK BARRICADES WILL BE REQUIRED EVERY 1000'. COST INCLUDED WITH TRAFFIC CONTROL AND PROTECTION STANDARD 701402.

MODEL: D570912_Plan16
FILE NAME: P:\Effingham\3454 - PTB 189 TIOT DS V-V\Work Order #6\Cadd\Sheet\D570D64_sht_Staging_3_0152_0153.dgn

CIVIL DESIGN, INC.
WBE / DBE
EFFINGHAM, IL
LICENSE #184.003222

USER NAME = rhanfland	DESIGNED - WMK	REVISED -	
	DRAWN - DMM	REVISED -	
PLOT SCALE = 100.0000 ' / in.	CHECKED - RLH	REVISED -	
PLOT DATE = 10/21/2021	DATE - 10/21/2021	REVISED -	

STATE OF ILLINOIS
DEPARTMENT OF TRANSPORTATION

TEMPORARY CONCRETE BARRIER LAYOUT
S.N. 057–0152 SB & S.N. 057–0153 NB

SCALE: 100.0000 ' / in. | SHEET 1 OF 1 SHEETS | STA. 379+00.00 TO STA. 409+00.00

F.A.I. RTE.	SECTION	COUNTY	TOTAL SHEETS	SHEET NO.
55	(57-1,57-2)BDS	MCLEAN	88	16
		CONTRACT NO. 70D64		
	ILLINOIS	FED. AID PROJECT		

TEMPORARY CONCRETE BARRIER LAYOUT – STAGE I
S.N. 057–0179 (NB) & S.N. 057–0178 (SB)

IF WORKING ON CONCURRENT STRUCTURES, DRUMS WITH STEADY BURN MONODIRECTIONAL LIGHTS AT 100' CENTERS SHALL BE USED PER HIGHWAY STANDARD 701402. ONLY DRUMS ALONG THE LANE SHIFTS AND 500' IN ADVANCE OF THE LANE SHIFTS WILL REQUIRE MONODIRECTIONAL LIGHTS. OTHER DRUMS ALONG THE TANGENT BETWEEN STRUCTURES WILL NOT REQUIRE LIGHTS. CHECK BARRICADES WILL BE REQUIRED EVERY 1000'. COST INCLUDED WITH TRAFFIC CONTROL AND PROTECTION STANDARD 701402.

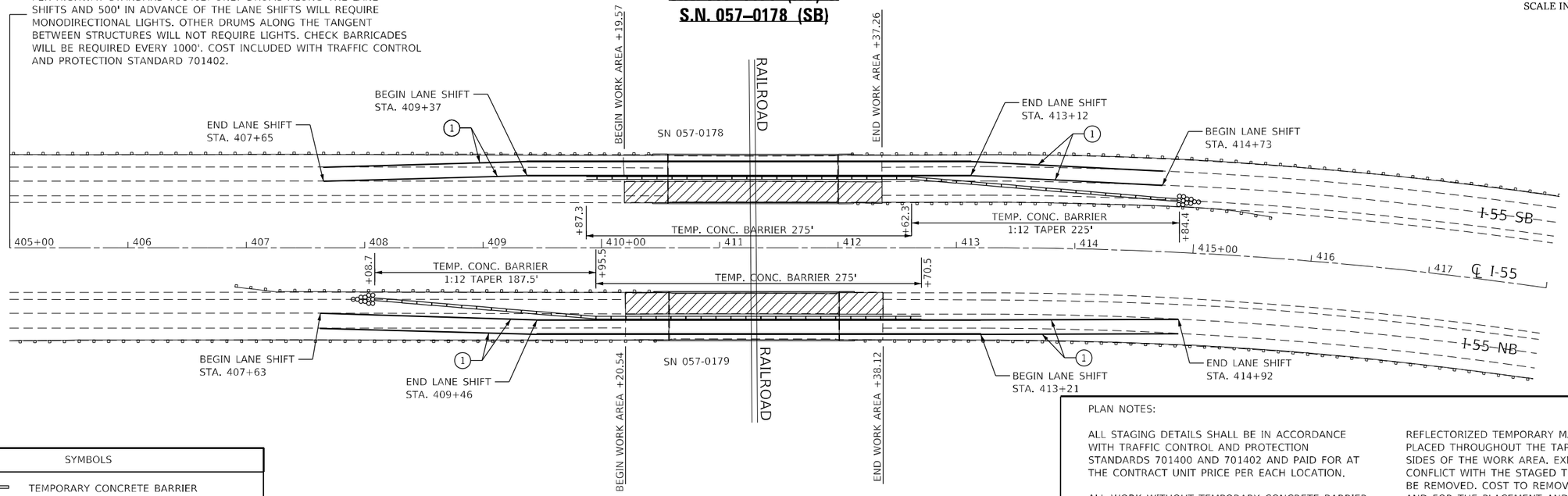

SYMBOLS	
	TEMPORARY CONCRETE BARRIER
	IMPACT ATTENUATOR
	WORK AREA
1	TEMPORARY PAVEMENT MARKINGS

PLAN NOTES:

ALL STAGING DETAILS SHALL BE IN ACCORDANCE WITH TRAFFIC CONTROL AND PROTECTION STANDARDS 701400 AND 701402 AND PAID FOR AT THE CONTRACT UNIT PRICE PER EACH LOCATION.

ALL WORK WITHOUT TEMPORARY CONCRETE BARRIER IN PLACE SHALL BE IN ACCORDANCE WITH TRAFFIC CONTROL AND PROTECTION STANDARDS 701400 AND 701401.

FOR ADDITIONAL DETAILS ASSOCIATED WITH TEMPORARY CONCRETE BARRRIER, SEE TRAFFIC CONTROL AND PROTECTION STANDARD 704001.

VERTICAL PANELS WITH LIGHTS AND REFLECTORS SHALL BE ATTACHED AT 25 FOOT CENTERS TO THE BARRIER WALL AND GUARDRAIL. COST INCLUDED WITH TRAFFIC CONTROL AND PROTECTION STANDARD 701402.

REFLECTORIZED TEMPORARY MARKING TAPE SHALL BE PLACED THROUGHOUT THE TAPER, AND ALONGSIDE BOTH SIDES OF THE WORK AREA. EXISTING MARKINGS THAT CONFLICT WITH THE STAGED TRAFFIC MARKINGS SHALL BE REMOVED. COST TO REMOVE EXISTING MARKINGS AND FOR THE PLACEMENT AND REMOVAL OF TEMPORARY MARKINGS SHALL BE INCLUDED WITH TRAFFIC CONTROL AND PROTECTION STANDARD 701402.

PRIOR TO ROUTING TRAFFIC ONTO THE SHOULDERS, THE CONTRACTOR SHALL SECURE ANY GRATES ON SHOULDER INLETS AS DIRECTED BY THE ENGINEER. THIS WORK SHALL BE PAID FOR ACCORDING TO ARTICLE 109.04 OF THE STANDAR SPECIFICATIONS.

PORTABLE CHANGEABLE MESSAGE SIGNS ARE REQUIRED SEVEN DAYS PRIOR TO CONSTRUCTION. THE RESIDENT ENGINEER OR TRAFFIC CONTROL SUPERVISOR SHALL PROVIDE AN APPROPRIATE MESSAGE.

TEMPORARY CONCRETE BARRIER LAYOUT – STAGE II
S.N. 057–0179 (NB) & S.N. 057–0178 (SB)

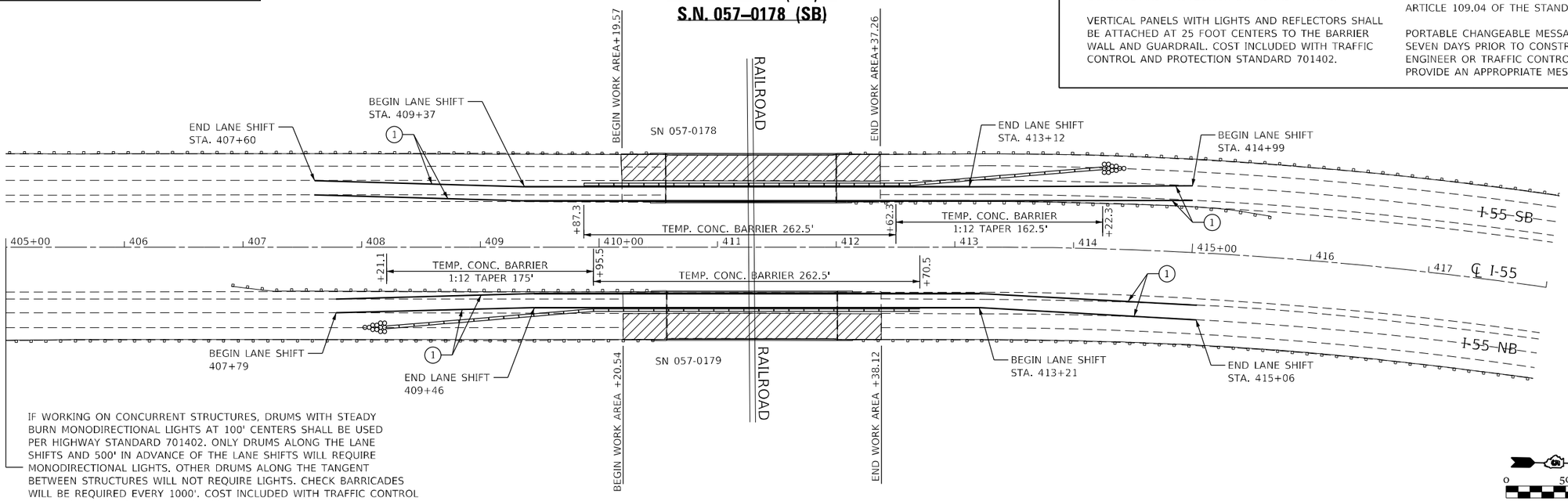

IF WORKING ON CONCURRENT STRUCTURES, DRUMS WITH STEADY BURN MONODIRECTIONAL LIGHTS AT 100' CENTERS SHALL BE USED PER HIGHWAY STANDARD 701402. ONLY DRUMS ALONG THE LANE SHIFTS AND 500' IN ADVANCE OF THE LANE SHIFTS WILL REQUIRE MONODIRECTIONAL LIGHTS. OTHER DRUMS ALONG THE TANGENT BETWEEN STRUCTURES WILL NOT REQUIRE LIGHTS. CHECK BARRICADES WILL BE REQUIRED EVERY 1000'. COST INCLUDED WITH TRAFFIC CONTROL AND PROTECTION STANDARD 701402.

0 50 100 150
SCALE IN FEET

MODEL: D570912_Plan17
FILE NAME: P:\Effingham\3454 - PTB 189 IDOT D5 V-V\Work Order #6\Cadd\Sheet\D570D64_cht_Staging_4_0178_0179.dgn

CDI
CIVIL DESIGN, INC.
WBE / DBE
EFFINGHAM, IL
LICENSE #184.003222

USER NAME = rhanfland	DESIGNED - WMK	REVISED -	
	DRAWN - DMM	REVISED -	
PLOT SCALE = 100.0000 ' / in.	CHECKED - RLH	REVISED -	
PLOT DATE = 10/21/2021	DATE - 10/21/2021	REVISED -	

STATE OF ILLINOIS
DEPARTMENT OF TRANSPORTATION

TEMPORARY CONCRETE BARRIER LAYOUT
S.N. 057–0178 SB & S.N. 057–0179 NB

SCALE: 100.0000 ' / in. | SHEET 1 OF 1 SHEETS | STA. 705+00.00 TO STA. 735+00.00

F.A.I. RTE.	SECTION	COUNTY	TOTAL SHEETS	SHEET NO.
55	(57-1,57-2)BDS	MCLEAN	88	17
		CONTRACT NO. 70D64		
		ILLINOIS	FED. AID PROJECT	

FOR STRUCTURES 057–0183, 0182, 0174, 0173

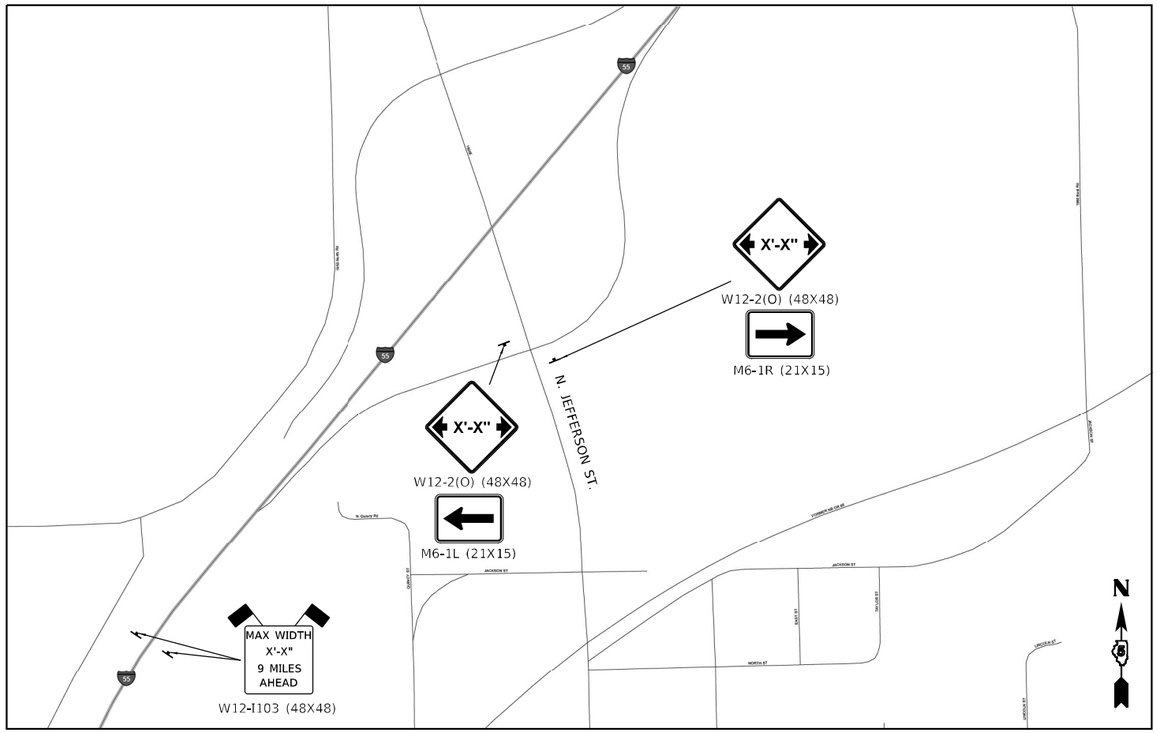

TOWANDA DETAIL

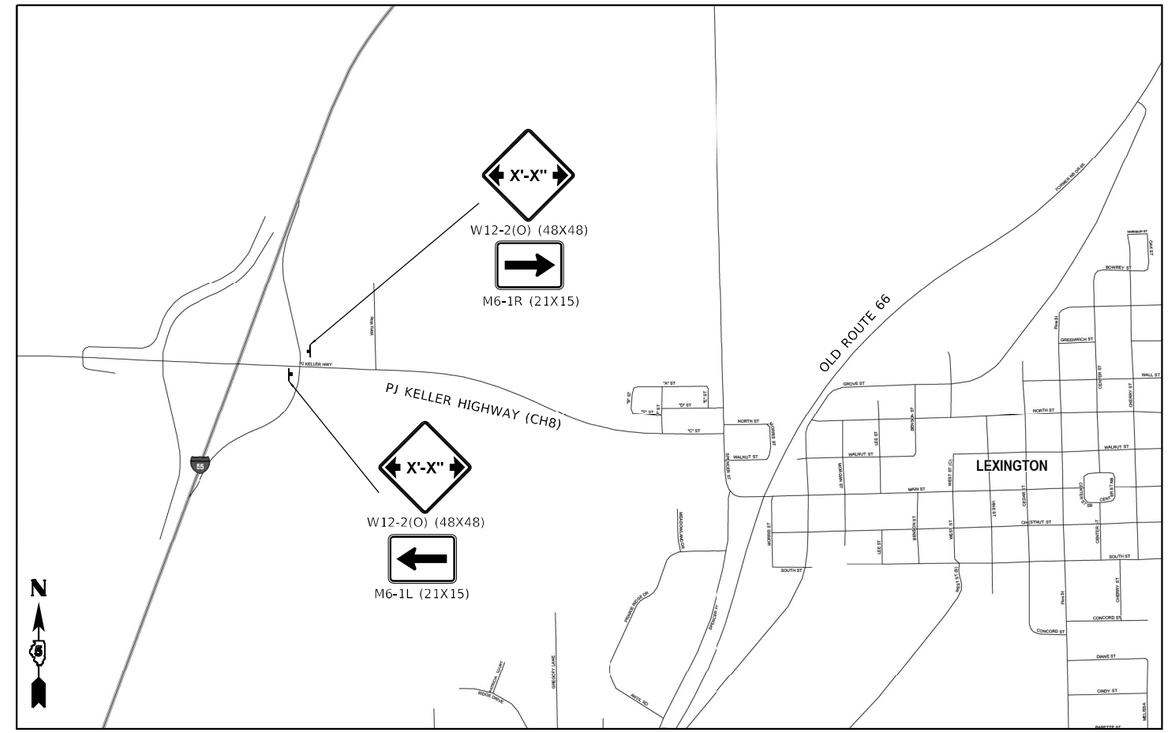

LEXINGTON DETAIL

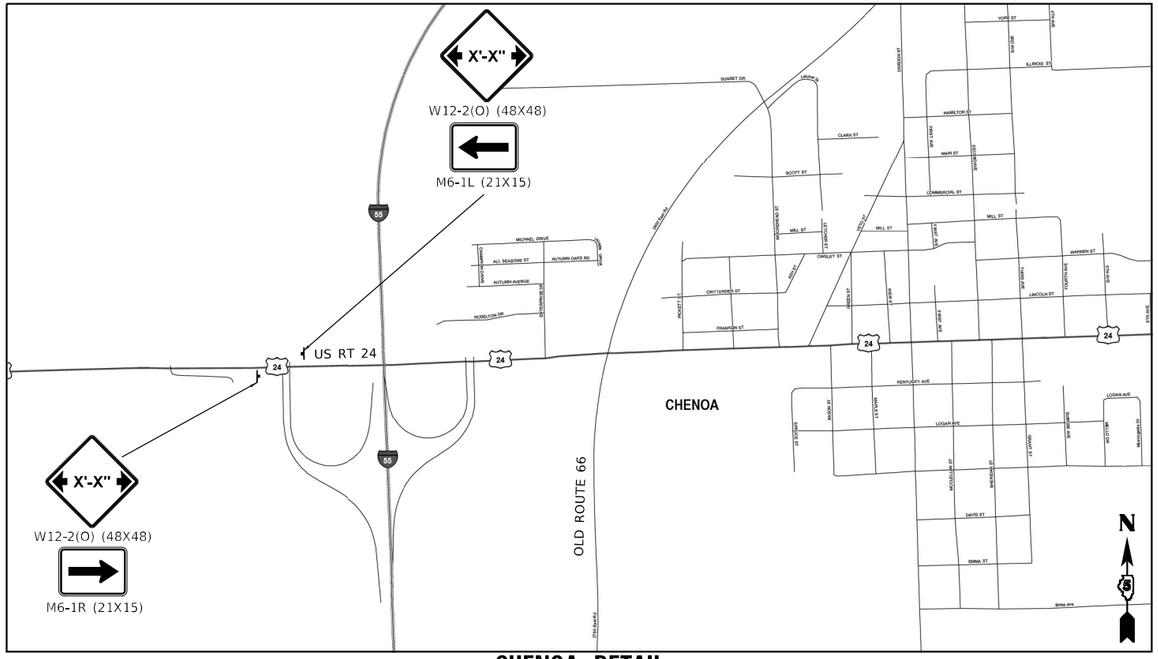

CHENOA DETAIL

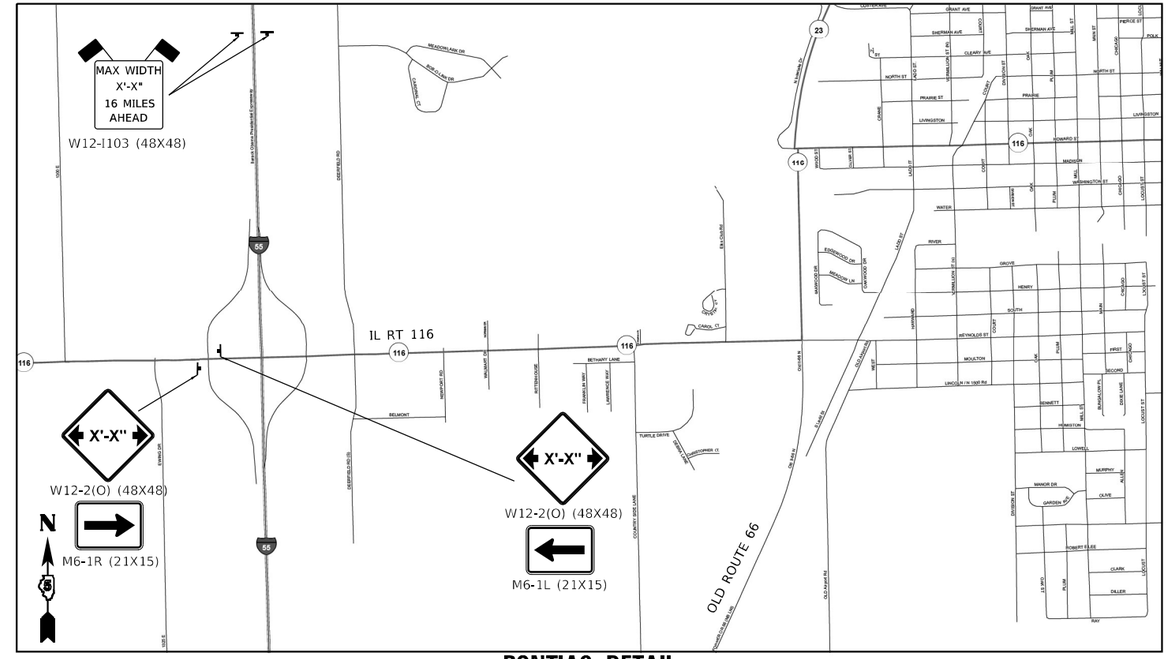

PONTIAC DETAIL

CDI CIVIL DESIGN, INC. WBE / DBE EFFINGHAM, IL LICENSE #184.003222	USER NAME = rhanfland	DESIGNED - WMK	REVISED -	STATE OF ILLINOIS DEPARTMENT OF TRANSPORTATION	I-55 MAINTENANCE OF TRAFFIC WIDTH RESTRICTION SIGNING DETAILS
		DRAWN - DMM	REVISED -		
	PLOT SCALE = 15840.0000 ' / in.	CHECKED - RLH	REVISED -		
	PLOT DATE = 10/21/2021	DATE - 10/21/2021	REVISED -		SCALE: 1584 0.0000 ' / in. SHEET 1 OF 2 SHEETS STA. TO STA.

F.A.I. RTE.	SECTION	COUNTY	TOTAL SHEETS	SHEET NO.
55	(57-1,57-2)BDS	MCLEAN	88	18
		CONTRACT NO. 70D64		
	ILLINOIS	FED. AID PROJECT		

MODEL: Default
FILE NAME: P:\Effingham\3454 - PTB 189 TOOT DS V-V\Work Order #8\Cadd\Sheet\0570D64-pht-details_widthrestriction_1.dgn

FOR STRUCTURES 057–0153, 0152, 0179, 0178

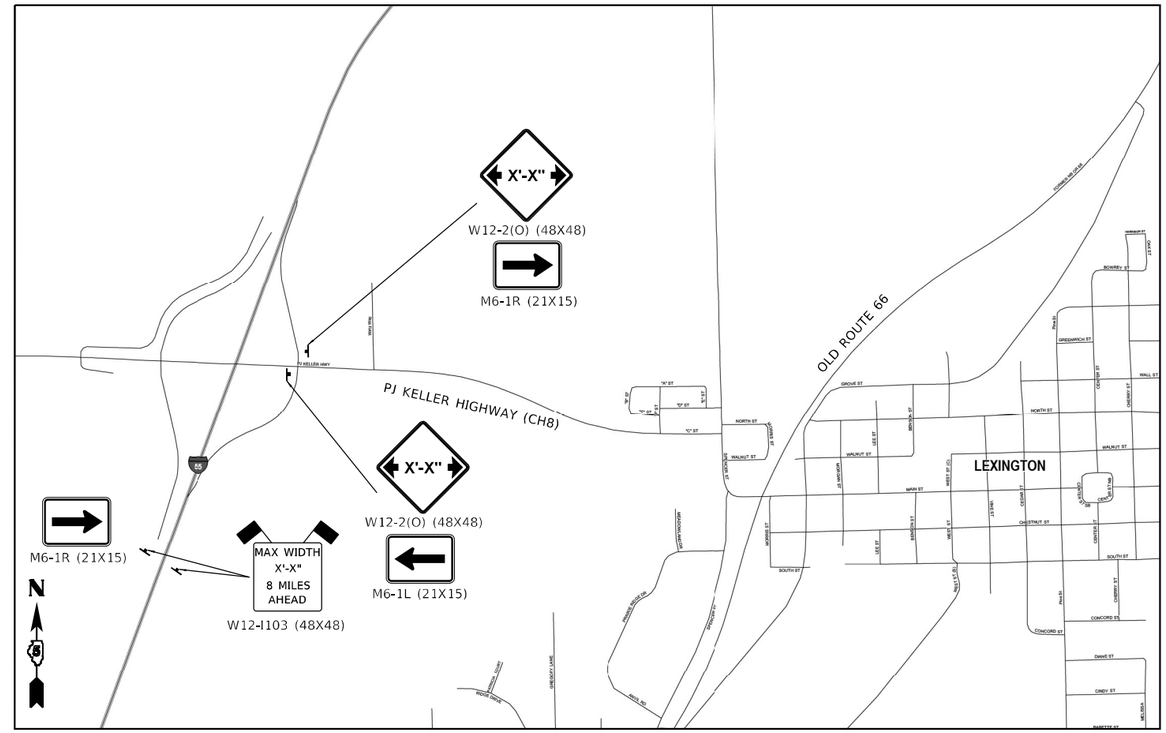

LEXINGTON DETAIL

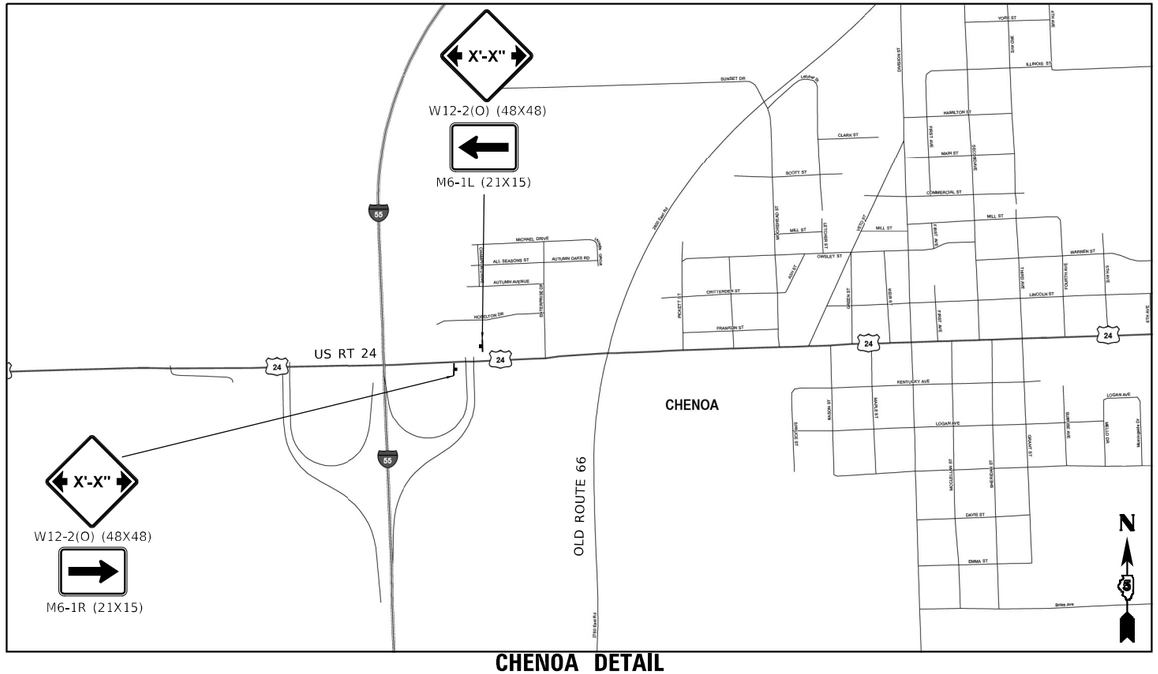

CHENOA DETAIL

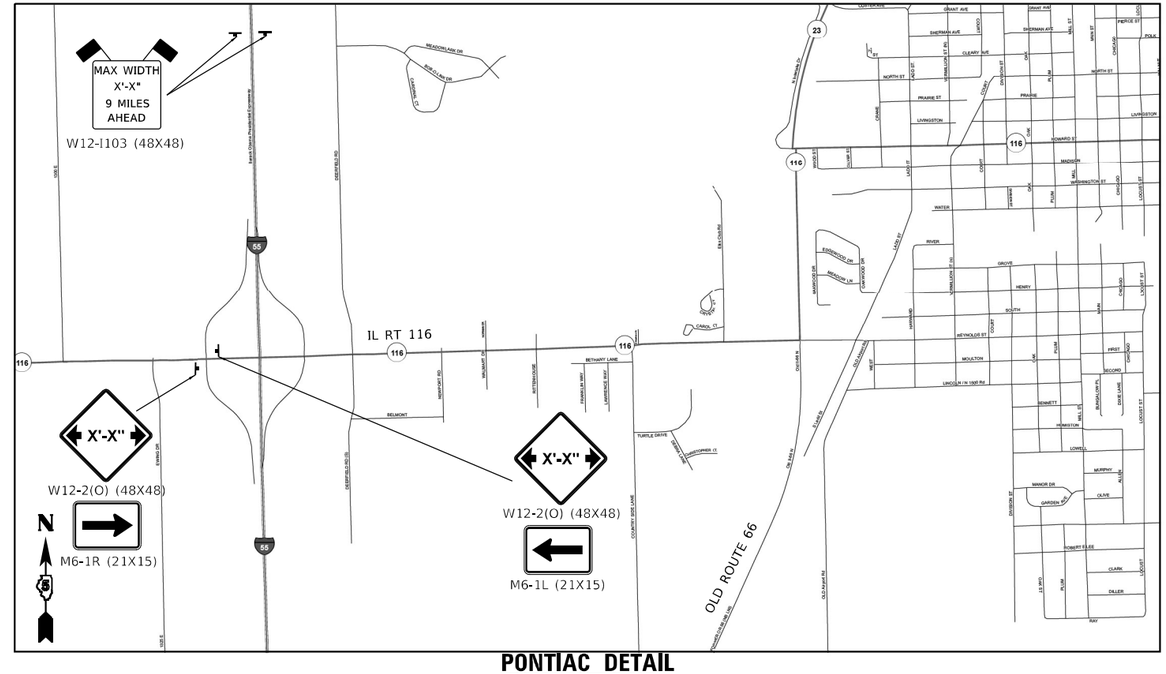

PONTIAC DETAIL

MODEL: Default
FILE NAME: P:\Effingham\3454 - PTB 189 TOOT DS V-V\Work Order #8\Cadd\Sheet\0570D64-sht-details_widthrestriction_2.dgn

CDI
CIVIL DESIGN, INC.
WBE / DBE
EFFINGHAM, IL
LICENSE #184.003222

USER NAME = rhanfland	DESIGNED - WMK	REVISED -	
	DRAWN - DMM	REVISED -	
PLOT SCALE = 15840.0000 ' / in.	CHECKED - RLH	REVISED -	
PLOT DATE = 10/21/2021	DATE - 10/21/2021	REVISED -	

STATE OF ILLINOIS
DEPARTMENT OF TRANSPORTATION

I-55 MAINTENANCE OF TRAFFIC
WIDTH RESTRICTION SIGNING DETAILS

SCALE: 1584.0000 ' / in. SHEET 2 OF 2 SHEETS STA. TO STA.

F.A.I. RTE.	SECTION	COUNTY	TOTAL SHEETS	SHEET NO.
55	(57-1,57-2)BDS	MCLEAN	88	19
		CONTRACT NO. 70D64		
	ILLINOIS	FED. AID PROJECT		

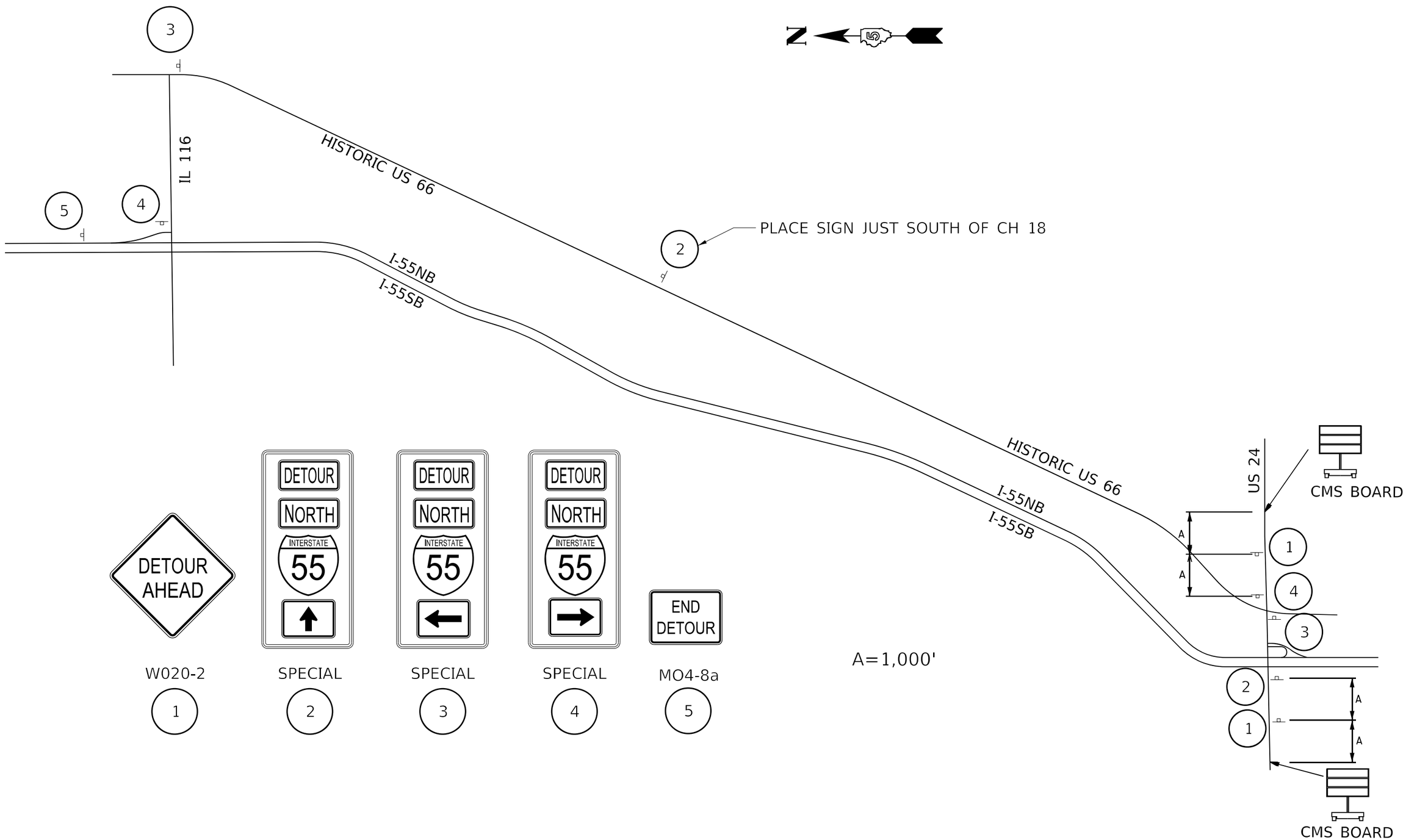

MODEL: Default
FILE NAME: P:\Effingham\3454 - PTB 189 IDOT DS V-V\Work Order #8\Cadd\Sheet\D570D64_Jht Detour at US 24 Rp B.dgn

CDI
CIVIL DESIGN, INC.
WBE / DBE
EFFINGHAM, IL
LICENSE #184.003222

USER NAME = rhanfland	DESIGNED - WMK	REVISED -	
	DRAWN - DMM	REVISED -	
PLOT SCALE = 500.0000 ' / in.	CHECKED - RLH	REVISED -	
PLOT DATE = 10/21/2021	DATE - 10/21/2021	REVISED -	

STATE OF ILLINOIS
DEPARTMENT OF TRANSPORTATION

DETOUR I-55 AT US 24 RAMP B

SCALE: 500.0000 ' / in. | SHEET 1 OF 1 SHEETS | STA. TO STA.

F.A.I. RTE.	SECTION	COUNTY	TOTAL SHEETS	SHEET NO.
55	(57-1,57-2)BDS	MCLEAN	88	20
		CONTRACT NO. 70D64		
	ILLINOIS	FED. AID PROJECT		

Structure 057-0152 was originally constructed in 1977 as FAI 55, Contract 29202, Section 57-1HB at Station 398+57.00 in McLean County. In 2003, the structure received repairs with Contract 66107, Section (57-1, 57-2) RS. The bituminous overlay and waterproofing membrane were removed and deck received a 2¼" microsilica concrete overlay. The abutment expansion joints were replaced with silicone joint sealer in a poly concrete nosing. The expansion bearings were replaced with elastomeric bearings. Existing floor drains were plugged. The approach slabs were removed and replaced. The beams were painted in August 2011.

The existing structure is a two span steel continuous multi beam bridge. The superstructure consists of eight 36" WF steel girder supporting a nominal 7¼" thick RC deck with a 2¼" microsilica concrete wearing surface. The superstructure is supported by a single trapezoidal column pier on a spread footing and two vaulted abutments on concrete piles. The approach spans are supported by six 36" PPC I-beams.

The structure has an overall length of 187'-5" from back to back of approach bents. The deck has an out to out width that varies from 42'-0" to 51'-0", and a deck (clear area) width that varies from 38'-6" to 47'-6" base to base of curb.

Note:
See Sheet 3 of 26 for Proposed Work, Bill of Material, and General Notes.

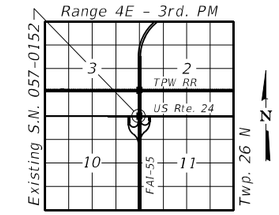

LOCATION SKETCH

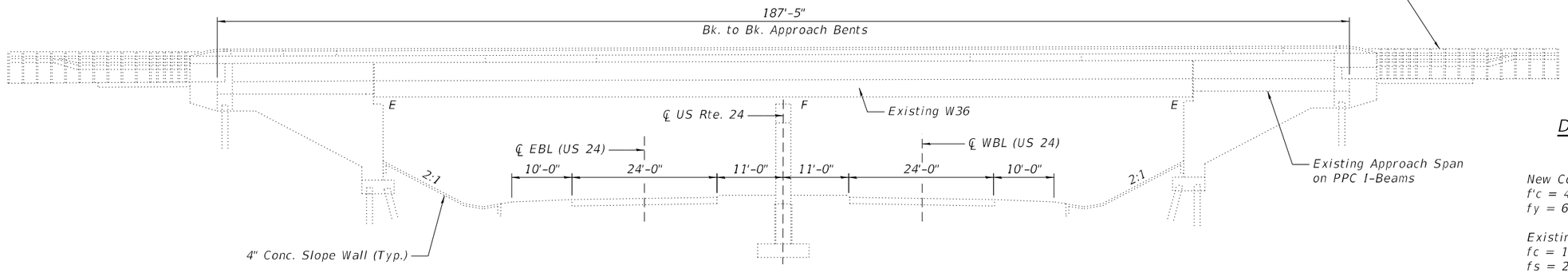

ELEVATION

DESIGN STRESSES
FIELD UNITS

New Construction
f'c = 4,000 psi
fy = 60,000 psi (Reinforcement)

Existing Structure
fc = 1,200 psi
fs = 20,000 psi (Reinforcement)
fs = 20,000 psi (Structural Steel)
f'c = 5,000 psi (PPC I-Beams)

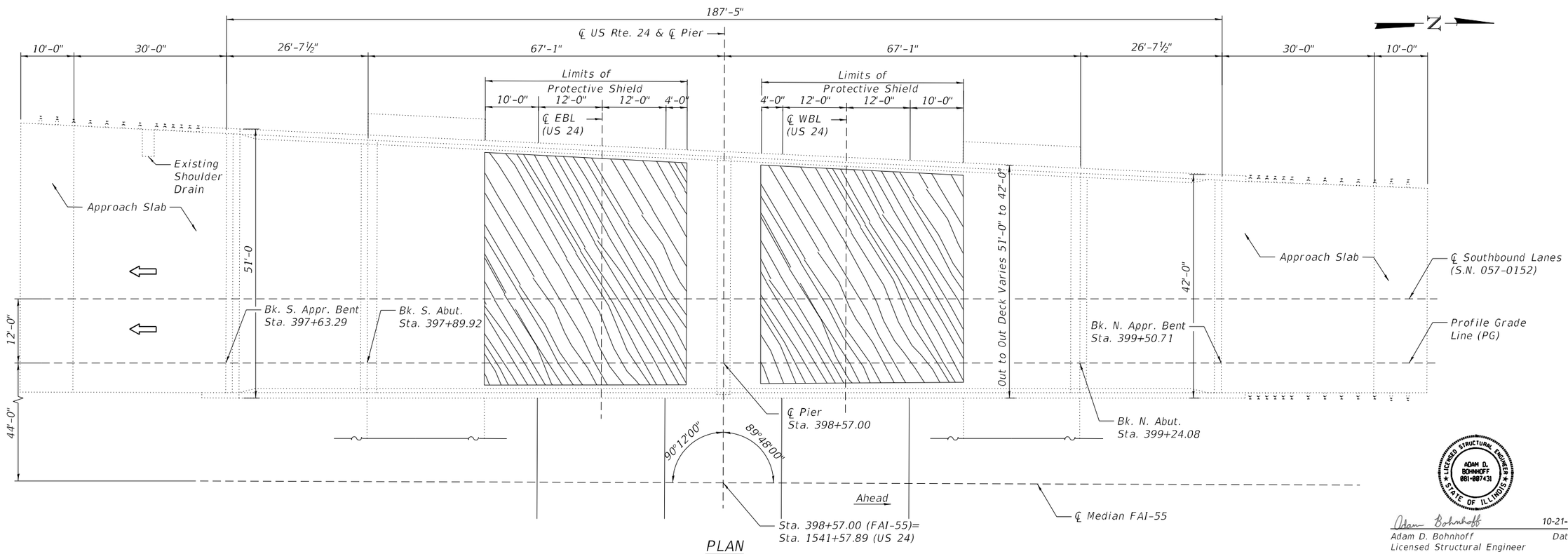

PLAN
(S.N. 057-0152)

LICENSED STRUCTURAL ENGINEER
ADAM D. BOHNHOFF
081-007431
STATE OF ILLINOIS

Adam Bohnhoff 10-21-2021
Adam D. Bohnhoff Date
Licensed Structural Engineer
State of Illinois No. 081-007431
Expires 11-30-2022

MODEL: GPE
FILE NAME: P:\Effingham\3454 - PTB 189 IDOT D5 VA\Work Order #6\Cadd\Sheet\152 & 153\D570D64_0152_0153_Combined.dgn

CDI CIVIL DESIGN, INC. WBE / DBE EFFINGHAM, IL LICENSE #184.003222	USER NAME =	DESIGNED - KAS	REVISED -	STATE OF ILLINOIS DEPARTMENT OF TRANSPORTATION	GENERAL PLAN AND ELEVATION S.N. 057-0152 (SB)
		CHECKED - TJZ	REVISED -		
	PLOT SCALE =	DRAWN - DWS	REVISED -		
	PLOT DATE =	CHECKED - KAS	REVISED -		SHEET 1 OF 26 SHEETS

F.A.I. RTE.	SECTION	COUNTY	TOTAL SHEETS	SHEET NO.
55	(57-1,57-2)BDS	MCLEAN	88	21
		CONTRACT NO. 70D64		
		ILLINOIS FED. AID PROJECT		

10/21/2021 2:52:19 PM

Structure 057-0153 was originally constructed in 1977 as FAI 55, Contract 29202, Section 57-1HB at Station 398+57.00 in McLean County. In 2003, the structure received repairs with Contract 66107, Section (57-1, 57-2) RS. The bituminous overlay and waterproofing membrane were removed and deck received a 2¼" microsilica concrete overlay. The abutment expansion joints were replaced with silicone joint sealer in a poly concrete nosing. The expansion bearings were replaced with elastomeric bearings. Existing floor drains were plugged. The approach slabs were removed and replaced. The beams were painted in August 2011.

The existing structure is a two span steel continuous multi beam bridge. The superstructure consists of nine 36" WF steel girder supporting a nominal 7¼" thick RC deck with a 2¼" microsilica concrete wearing surface. The superstructure is supported by a single trapezoidal column pier on a spread footing and two vaulted abutments on concrete piles. The approach spans are supported by six 36" PPC I-beams.

The structure has an overall length of 187'-5" from back to back of approach bents. The deck has an out to out width that varies from 52'-3" to 56'-0", and a deck (clear area) width that varies from 48'-9" to 52'-6" base to base of curb.

Note:
See Sheet 3 of 26 for Proposed Work, Bill of Material, and General Notes.

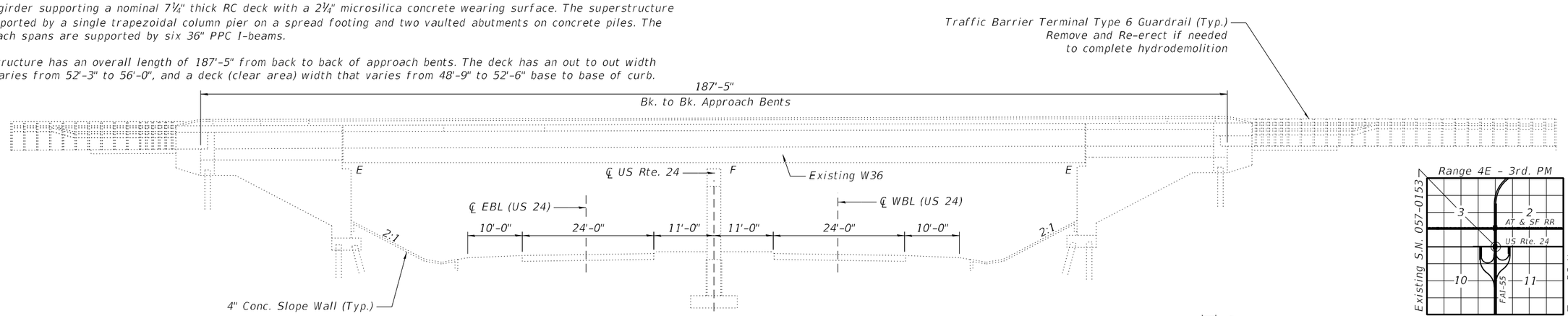

ELEVATION

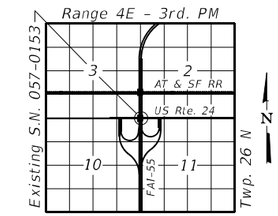

LOCATION SKETCH

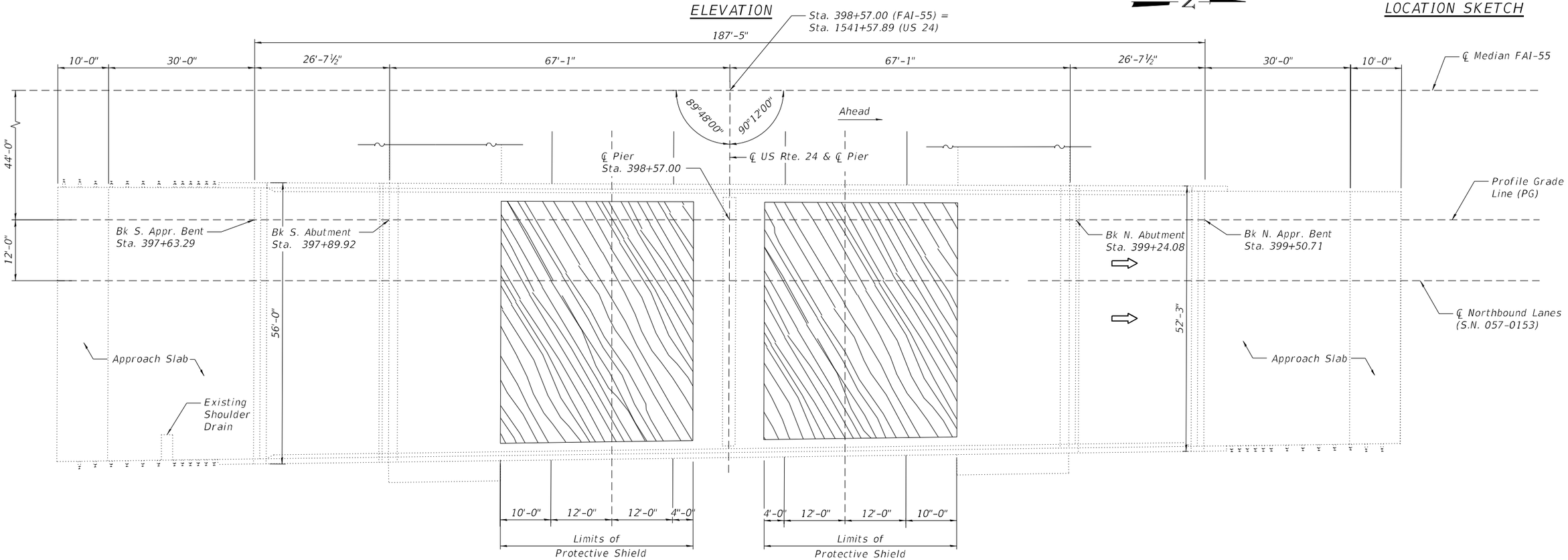

PLAN
(S.N. 057-0153)

MODEL: GPE2
FILE NAME: P:\Effingham\3454 - PTB 189 IDOT D5 VA\Work Order #6\Cadd\Sheet\152 & 153\D570D64_0152_0153_Combined.dgn

CDI CIVIL DESIGN, INC. WBE / DBE EFFINGHAM, IL LICENSE #184.003222	USER NAME =	DESIGNED - KAS	REVISED -	STATE OF ILLINOIS DEPARTMENT OF TRANSPORTATION	GENERAL PLAN AND ELEVATION S.N. 057-0153 (NB)
		CHECKED - TJZ	REVISED -		
	PLOT SCALE =	DRAWN - DWS	REVISED -		
	PLOT DATE =	CHECKED - KAS	REVISED -		SHEET 2 OF 26 SHEETS

F.A.I. RTE.	SECTION	COUNTY	TOTAL SHEETS	SHEET NO.
55	(57-1,57-2)BDS	MCLEAN	88	22
		CONTRACT NO. 70D64		
		ILLINOIS	FED. AID PROJECT	

10/21/2021 2:52:24 PM

TOTAL BILL OF MATERIAL SN 057-0152 & SN 057-0153

Item	Unit	Total
Protective Coat	Sq. Yd.	3259
Concrete Removal	Cu. Yd.	98.8
Protective Shield	Sq. Yd.	748
Floor Drains	Each	8
Concrete Structures	Cu. Yd.	35.9
Concrete Superstructure	Cu. Yd.	72.0
Furnishing and Erecting Structural Steel	Pound	8190
Stud Shear Connectors	Each	594
Reinforcement Bars, Epoxy Coated	Pound	20100
Bar Splicers	Each	136
Preformed Joint Seal 1"	Foot	195
Preformed Joint Strip Seal	Foot	197
Bridge Deck Grooving (Longitudinal)	Sq. Yd.	2077
Structural Steel Removal	Pound	8190
Structural Steel Repair	Pound	6880
Bridge Deck Latex Concrete Overlay, 2¼"	Sq. Yd.	860
Bridge Deck Latex Concrete Overlay, 3"	Sq. Yd.	1754
Bridge Deck Scarification 2"	Sq. Yd.	860
Bridge Deck Scarification 2¾"	Sq. Yd.	1754
Structural Repair of Concrete (Depth Equal to or Less than 5")	Sq. Ft.	1226
Deck Slab Repair (Full Depth, Type I)	Sq. Yd.	62
Deck Slab Repair (Full Depth, Type II)	Sq. Yd.	4
Diamond Grinding (Bridge Section)	Sq. Yd.	2607

INDEX OF SHEETS

PROPOSED WORK

1. Perform Bridge Deck Scarification on Bridge Deck, Approach Slabs, and PCC Connectors.
2. Removal of Deck Ends and Parapet at Deck Ends.
3. Removal of Existing Joints.
4. Perform Beam End Repairs and Diaphragm Replacement.
5. Perform Full-Depth Patching.
6. Place New Floor Drains.
7. Pour Deck Ends.
8. Insert Rubber Strip Seal into Locking Edge Rails.
9. Pour Parapets.
10. Replace Joints at Approach Ends.
11. Place Latex Concrete Overlay on Bridge Deck, Approach Slabs, and PCC Connectors.
12. Perform Diamond Grinding and Longitudinal Deck Grooving.
13. Perform Substructure Repairs.
14. Apply Protective Coat.

GENERAL NOTES

Plan dimensions and details relative to the existing structure have been taken from existing plans and are subject to nominal construction variations. It shall be the Contractor's responsibility to verify such dimensions and details in the field and make the necessary approved adjustments prior to construction or ordering of materials. Such variations shall not be cause for additional compensation for a change in the scope of work. However, the Contractor will be paid for the quantity actually furnished at the unit price for the work.

Reinforcement bars designated (E) shall be epoxy coated.

Up to ¼ inch may be ground off the bridge deck and bridge approach slabs through Diamond Grinding.

Prior to pouring the new concrete deck, all heavy or loose rust, loose mill scale, and other loose or potentially detrimental foreign material shall be removed from the surfaces in contact with concrete. Tightly adhered paint may remain unless otherwise noted. Removal shall be accomplished by methods that will not damage the steel and the cost will be included in the pay item covering removal of the existing concrete.

Existing structural steel that will be in contact with new structural steel shall be cleaned and painted prior to erection as required by the Special Provision "Cleaning and Painting Contact Surface Areas of Existing Steel Structures".

Existing reinforcement bars extending into the removal area shall be cleaned, straightened and incorporated into the new construction. Any reinforcement bars that are damaged during concrete removal shall be replaced with approved bar splicer or anchorage system. Cost included with Concrete Removal.

Joint openings shall be adjusted according to Article 520.04 of the Std. Specs. when the deck is poured at an ambient temperature other than 50°F.

Expansion joints shall be fabricated and installed according to the manufacturer's recommendations and as approved by the Engineer.

Expansion joints shall be fabricated to conform to the existing cross slopes of the bridge.

Protective Coat shall be applied from end to end of approaches to entire deck surface and along the vertical faces of the parapets.

Slope wall shall be reinforced with welded-wire fabric, 6 in. x 6 in. - W4.0 x W4.0, weighing 58 pounds per 100 sq. ft.

Synthetic fibers shall be included in the bridge deck concrete overlay specified. See Special Provisions.

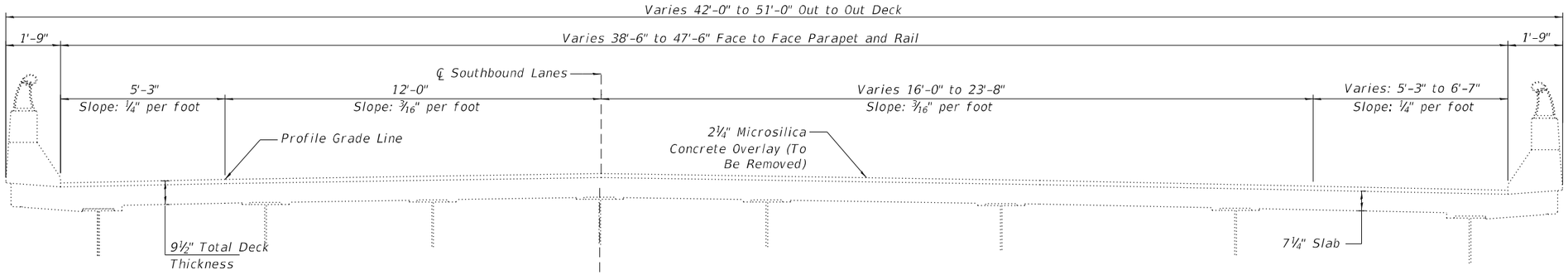

EXISTING CROSS SECTION

(Looking South)

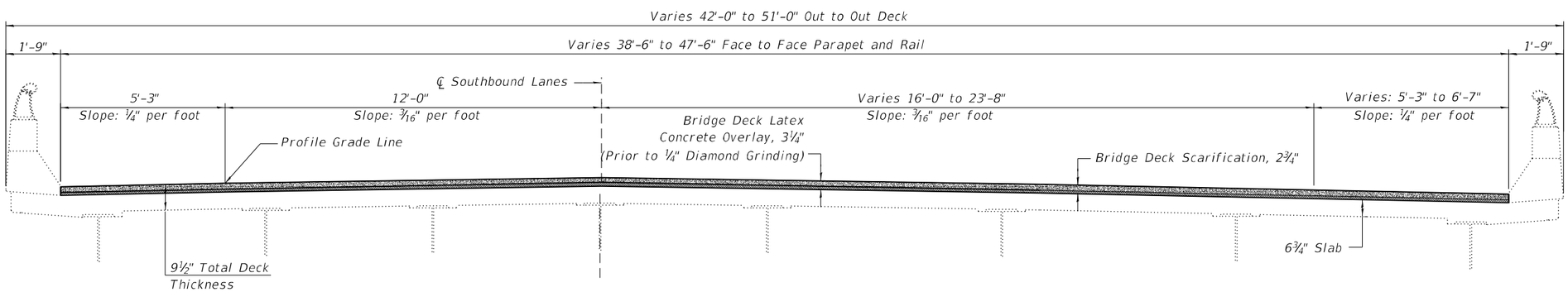

PROPOSED CROSS SECTION

(Looking South)

MODEL: Cross Sections
FILE NAME: P:\Effingham\3454 - PTB 189 IDOT D5 VA\Work Order #6\Cadd\Sheet\152 & 153\D570D64_0152_0153_Combined.dgn

CDI CIVIL DESIGN, INC. WBE / DBE EFFINGHAM, IL LICENSE #184.003222	USER NAME =	DESIGNED - KAS	REVISED -	STATE OF ILLINOIS DEPARTMENT OF TRANSPORTATION	EXISTING AND PROPOSED TYPICAL CROSS SECTIONS S.N. 057-0152 (SB)	F.A.I. RTE.	SECTION	COUNTY	TOTAL SHEETS / SHEET NO.
		CHECKED - TJZ	REVISED -			55	(57-1,57-2)BDS	MCLEAN	88 / 24
	PLOT SCALE =	DRAWN - DWS	REVISED -					CONTRACT NO. 70D64	
	PLOT DATE =	CHECKED - KAS	REVISED -		SHEET 4 OF 26 SHEETS		ILLINOIS	FED. AID PROJECT	

11/29/2021 12:12:37 PM

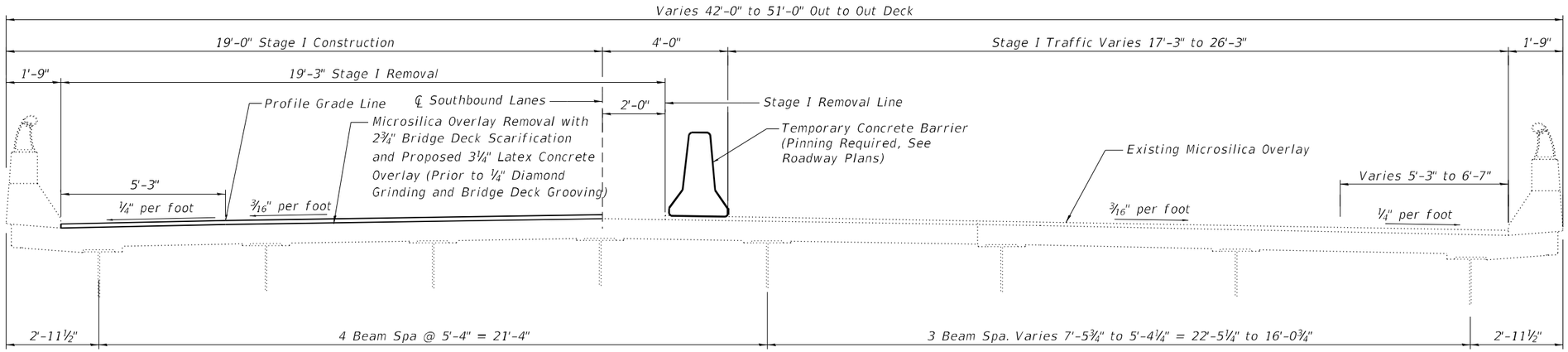

STAGE I CONSTRUCTION DETAILS

(Looking South)

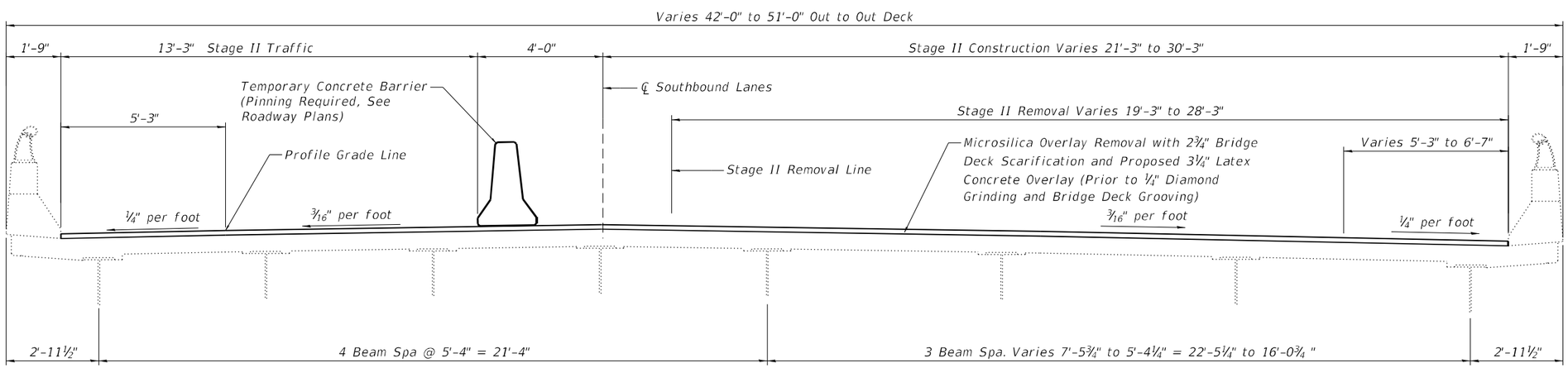

STAGE II CONSTRUCTION DETAILS

(Looking South)

MODEL: Stage Const1
FILE NAME: P:\Effingham\3454 - PTB 189 IDOT D5 VA\Work Order #6\Cadd\Sheet\152 & 153\D570D64_0152_0153_Combined.dgn

CDI CIVIL DESIGN, INC. WBE / DBE EFFINGHAM, IL LICENSE #184.003222	USER NAME =	DESIGNED - KAS	REVISED -	STATE OF ILLINOIS DEPARTMENT OF TRANSPORTATION	STAGE CONSTRUCTION DETAILS S.N. 057-0152 (SB)	F.A.I. RTE.	SECTION	COUNTY	TOTAL SHEETS / SHEET NO.
		CHECKED - TJZ	REVISED -			55	(57-1,57-2)BDS	MCLEAN	88 / 25
	PLOT SCALE =	DRAWN - DWS	REVISED -					CONTRACT NO. 70D64	
	PLOT DATE =	CHECKED - KAS	REVISED -		SHEET 5 OF 26 SHEETS			ILLINOIS FED. AID PROJECT	

11/29/2021 12:13:29 PM

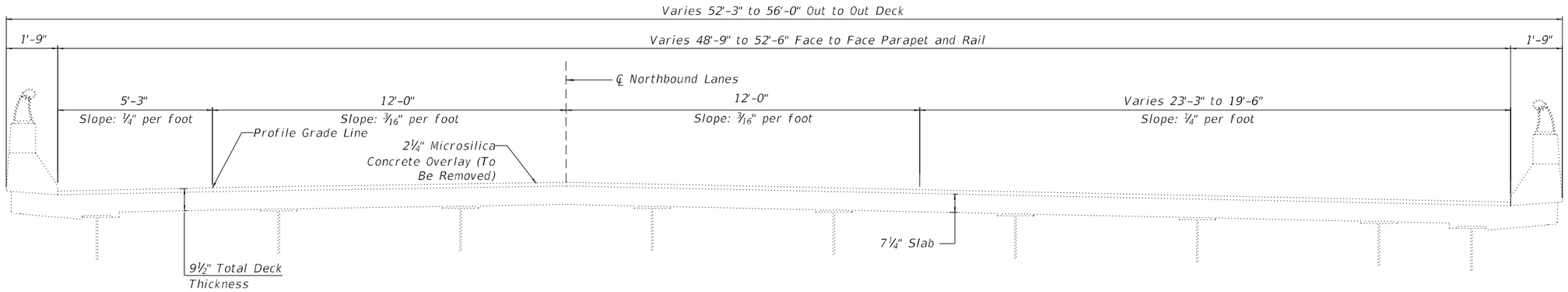

EXISTING CROSS SECTION

(Looking North)

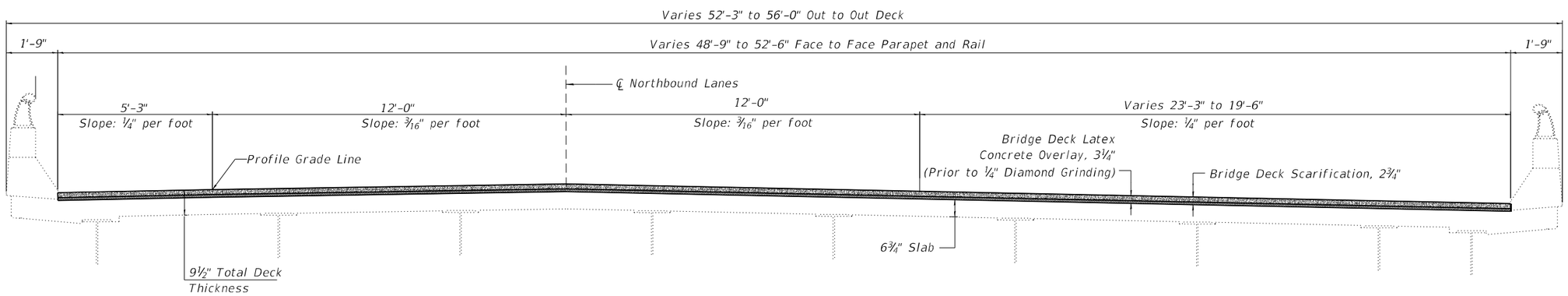

PROPOSED CROSS SECTION

(Looking North)

MODEL: Cross Sect 1
FILE NAME: P:\Effingham\3454 - PTB 189 IDOT D5 VA\Work Order #6\Cadd\Sheet\152 & 153\D570D64_0152_0153_Combined.dgn

CIVIL DESIGN, INC.
WBE / DBE
EFFINGHAM, IL
LICENSE #184.003222

USER NAME =	DESIGNED - KAS	REVISED -	
	CHECKED - TJZ	REVISED -	
PLOT SCALE =	DRAWN - DWS	REVISED -	
PLOT DATE =	CHECKED - KAS	REVISED -	

STATE OF ILLINOIS
DEPARTMENT OF TRANSPORTATION

EXISTING AND PROPOSED TYPICAL CROSS SECTIONS
S.N. 057-0153 (NB)

SHEET 6 OF 26 SHEETS

F.A.I. RTE.	SECTION	COUNTY	TOTAL SHEETS	SHEET NO.
55	(57-1,57-2)BDS	MCLEAN	88	26
		CONTRACT NO. 70D64		
		ILLINOIS	FED. AID PROJECT	

11/29/2021 12:14:46 PM

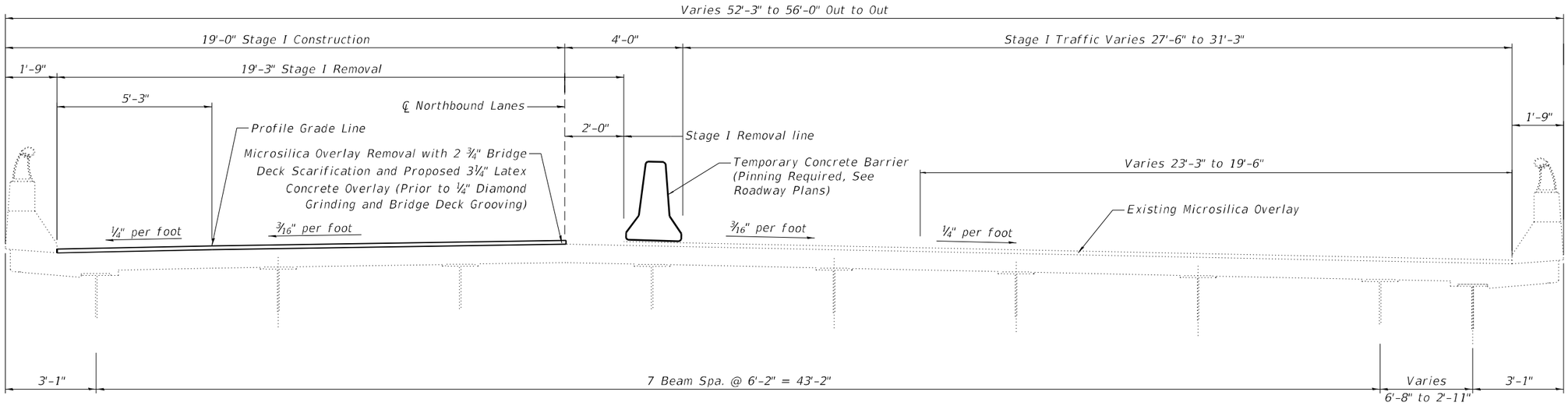

STAGE I CONSTRUCTION DETAILS

(Looking North)

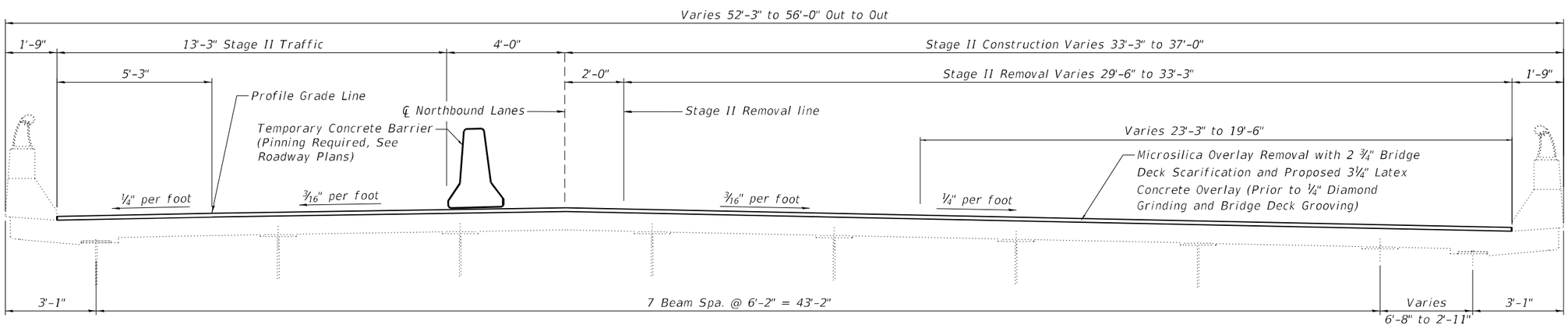

STAGE II CONSTRUCTION DETAILS

(Looking North)

MODEL: Stage Const 2
FILE NAME: P:\Effingham\3454 - PTB 189 IDOT D5 VAV\Work Order #6\Cadd\Sheet\152 & 153\D570D64_0152_0153_Combined.dgn

CDI CIVIL DESIGN, INC. WBE / DBE EFFINGHAM, IL LICENSE #184.003222	USER NAME =	DESIGNED - KAS	REVISED -	STATE OF ILLINOIS DEPARTMENT OF TRANSPORTATION	STAGE CONSTRUCTION DETAILS S.N. 057-0153 (NB)	F.A.I. RTE.	SECTION	COUNTY	TOTAL SHEETS / SHEET NO.
		CHECKED - TJZ	REVISED -			55	(57-1,57-2)BDS	MCLEAN	88 / 27
	PLOT SCALE =	DRAWN - DWS	REVISED -					CONTRACT NO. 70D64	
	PLOT DATE =	CHECKED - KAS	REVISED -		SHEET 7 OF 26 SHEETS		ILLINOIS	FED. AID PROJECT	

10/21/2021 2:52:30 PM

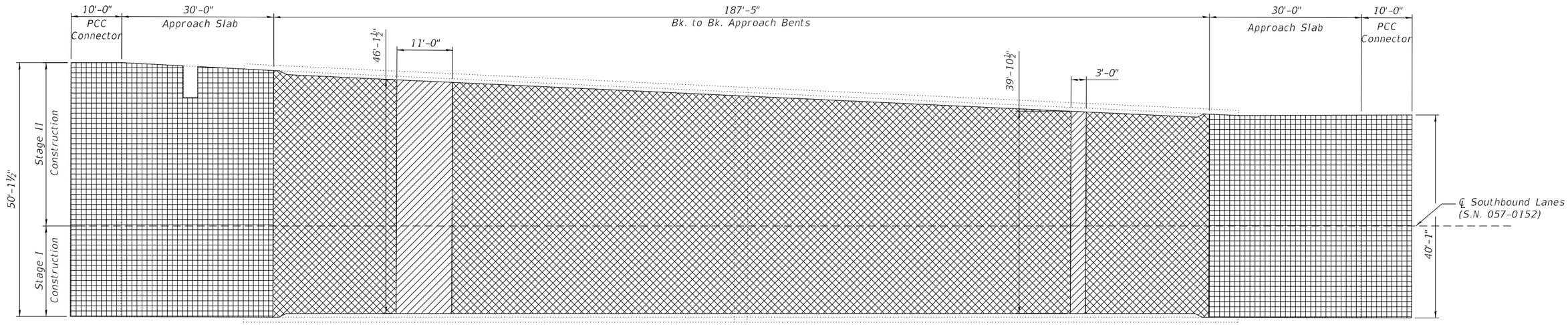

PLAN

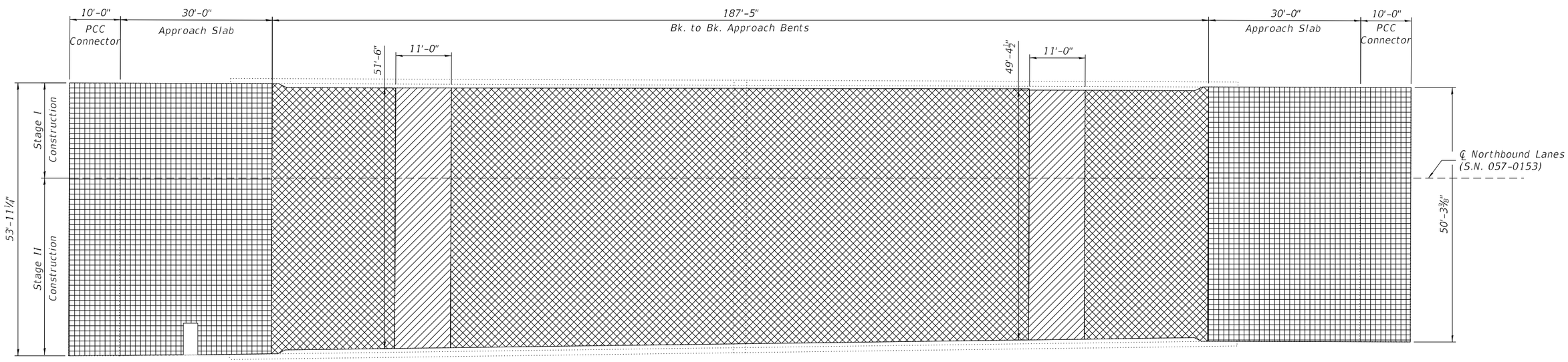

PLAN

Bridge Deck Scarification, 2", Bridge Deck Latex Concrete Overlay, 2¼", Diamond Grinding, ¼" and Bridge Deck Grooving (Longitudinal)

Bridge Deck Scarification, 2¾", Bridge Latex Concrete Overlay, 3", Diamond Grinding, ¼" and Bridge Deck Grooving (Longitudinal)

Diamond Grinding, ¼" and Bridge Deck Grooving (Longitudinal) (Areas of full depth removal at Deck Ends)

BILL OF MATERIAL (Deck & Approach)

Structure	Item	Unit	Total
057-0152	Bridge Deck Latex Concrete Overlay, 3"	Sq. Yd.	829
	Bridge Deck Latex Concrete Overlay, 2¼"	Sq. Yd.	397
	Bridge Deck Scarification, 2¾"	Sq. Yd.	829
	Bridge Deck Scarification, 2"	Sq. Yd.	397
	Bridge Deck Grooving (Longitudinal)	Sq. Yd.	933
	Diamond Grinding (Bridge Section)	Sq. Yd.	1194

Structure	Item	Unit	Total
057-0153	Bridge Deck Latex Concrete Overlay, 3"	Sq. Yd.	925
	Bridge Deck Latex Concrete Overlay, 2¼"	Sq. Yd.	463
	Bridge Deck Scarification, 2¾"	Sq. Yd.	925
	Bridge Deck Scarification, 2"	Sq. Yd.	463
	Bridge Deck Grooving (Longitudinal)	Sq. Yd.	1144
	Diamond Grinding (Bridge Section)	Sq. Yd.	1413

Note:
Care must be taken not to damage the existing shoulder drains in the approaches.

MODEL: Wearing Surface
FILE NAME: P:\Effingham\3454 - PTB 189 IDOT D5 VA\Work Order #6\Cadd\Sheet\152 & 153\D570D64_0152_0153_Combined.dgn

CIVIL DESIGN, INC.
WBE / DBE
EFFINGHAM, IL
LICENSE #184.003222

USER NAME =	DESIGNED - KAS	REVISED -	
	CHECKED - TJZ	REVISED -	
PLOT SCALE =	DRAWN - DWS	REVISED -	
PLOT DATE =	CHECKED - KAS	REVISED -	

STATE OF ILLINOIS
DEPARTMENT OF TRANSPORTATION

WEARING SURFACE PLAN
S.N. 057-0152 (SB) & S.N. 057-0153 (NB)

SHEET 8 OF 26 SHEETS

F.A.I. RTE.	SECTION	COUNTY	TOTAL SHEETS	SHEET NO.
55	(57-1,57-2)BDS	MCLEAN	88	28

CONTRACT NO. 70D64

ILLINOIS FED. AID PROJECT

10/21/2021 2:52:31 PM

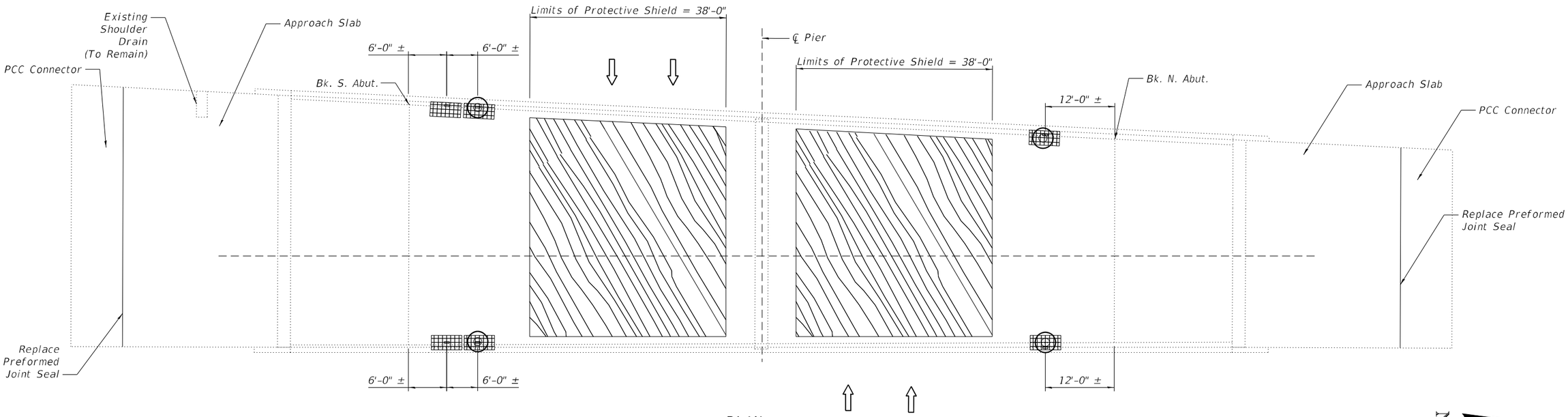

PLAN

NOTES:

Patch sizes shown represent conditions at the time the plans were completed. An Estimated 2% of the Deck Area has been included should additional Deck Slab Repair (Full Depth, Type I) be required after Bridge Deck Scarification.

The actual sizes and locations of patching shall be determined by the Resident Engineer after removal of the wearing surface, before patching operations begin. The Engineer shall show the actual locations of the deck repairs on As-Built plans.

The existing slab drains and extensions shall be removed. Cost included with Deck Slab Repair (Full Depth, Type I).

Care must be taken not to damage the existing shoulder drains in the approaches.

Extreme care must be used when removing concrete near the top flange of the beams. The Contractor is responsible for any damage to the beams.

See Sheet 16 of 26 for Floor Drain Details.

LEGEND

- Proposed floor drain location
- Deck Slab Repair (Full Depth, Type I) at all Drain Locations. All repair areas are 2'-0" x 1'-1", unless otherwise noted.
- Protective Shield

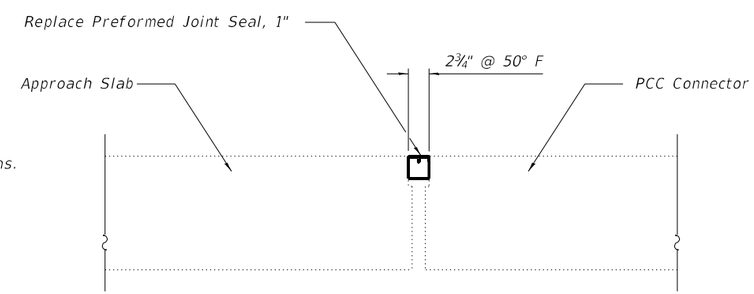

PREFORMED JOINT REPLACEMENT DETAIL

S.N. 057-0152 North & South Approach

BILL OF MATERIAL

Structure	Item	Unit	Total
057-0152	Deck Slab Repair (Full Depth, Type I)	Sq. Yd.	20
057-0152	Protective Shield	Sq. Yd.	343
057-0152	Preformed Joint Seal, 1"	Foot	90

MODEL: Floor Drain and Patching
FILE NAME: P:\Effingham\3454 - PTB 189 IDOT D5 VA\Work Order #6\Cadd\Sheet\152 & 153\D570D64_0152_0153_Combined.dgn

CIVIL DESIGN, INC.
WBE / DBE
EFFINGHAM, IL
LICENSE #184.003222

USER NAME =	DESIGNED - KAS	REVISED -	
	CHECKED - TJZ	REVISED -	
PLOT SCALE =	DRAWN - DWS	REVISED -	
PLOT DATE =	CHECKED - KAS	REVISED -	

STATE OF ILLINOIS
DEPARTMENT OF TRANSPORTATION

FLOOR DRAIN AND PATCHING DETAILS
S.N. 057-0152 (SB)

SHEET 9 OF 26 SHEETS

F.A.I. RTE.	SECTION	COUNTY	TOTAL SHEETS	SHEET NO.
55	(57-1,57-2)BDS	MCLEAN	88	29

CONTRACT NO. 70D64

ILLINOIS FED. AID PROJECT

11/29/2021 12:15:37 PM

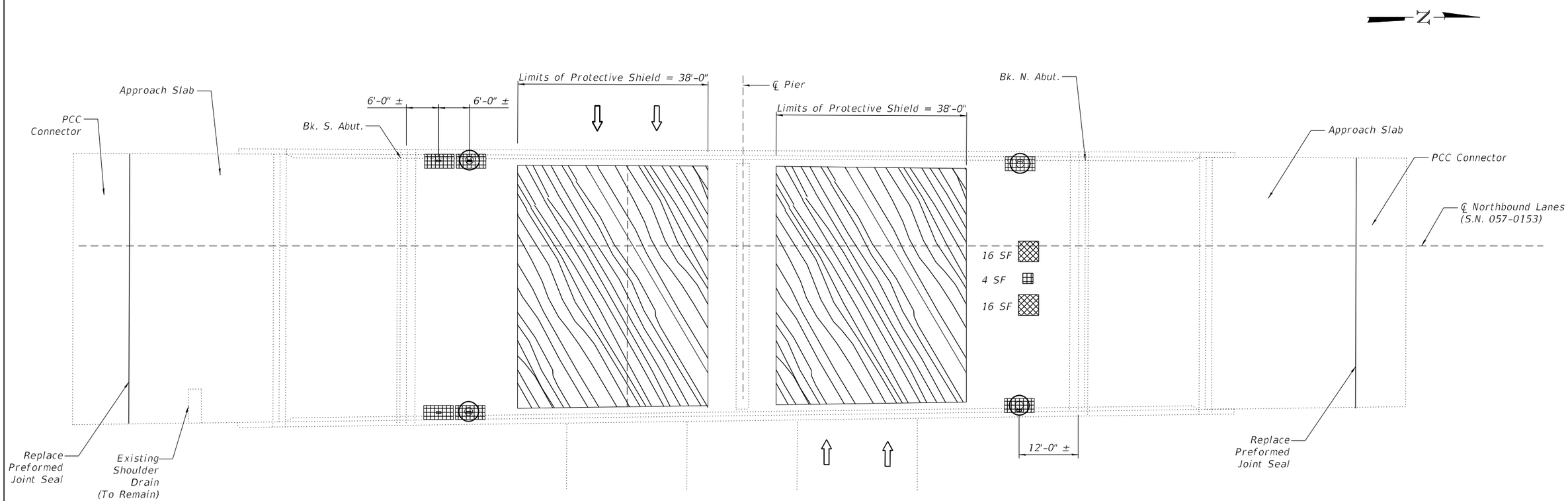

PLAN

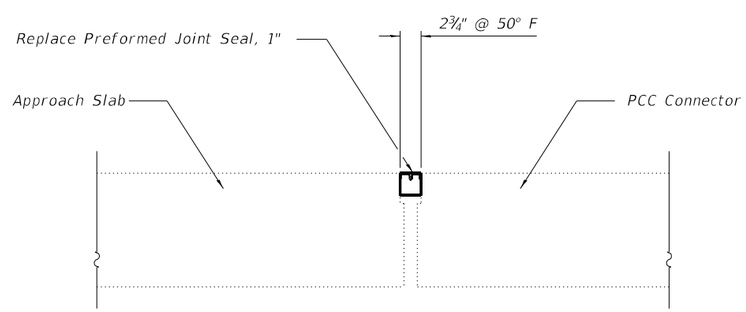

PREFORMED JOINT REPLACEMENT DETAIL

S.N. 057-0153 North and South Approach

NOTES:

Patch sizes shown represent conditions at the time the plans were completed. An Estimated 4% of the Deck Area has been included should additional Deck Slab Repair (Full Depth, Type I) be required after Bridge Deck Scarification.

The actual sizes and locations of patching shall be determined by the Resident Engineer after removal of the wearing surface, before patching operations begin. The Engineer shall show the actual locations of the deck repairs on As-Built plans.

The existing drains and extensions shall be removed. Cost included with Deck Slab Repair (Full Depth, Type I).

Care must be taken not to damage the existing shoulder drains in the approaches.

Extreme care must be used when removing concrete near the top flange of the beams. The Contractor is responsible for any damage to the beams.

See Sheet 17 of 26 for Floor Drain Details.

LEGEND

- Proposed floor drain location
- Deck Slab Repair (Full Depth, Type I) at all Drain Locations. All repair areas are 2'-0" x 1'-1", unless otherwise noted.
- Deck Slab Repair (Full Depth, Type II)
- Protective Shield

BILL OF MATERIAL

Structure	Item	Unit	Total
057-0153	Deck Slab Repair (Full Depth, Type I)	Sq. Yd.	42
057-0153	Deck Slab Repair (Full Depth, Type II)	Sq. Yd.	4
057-0153	Protective Shield	Sq. Yd.	405
057-0153	Preformed Joint Seal, 1"	Foot	105

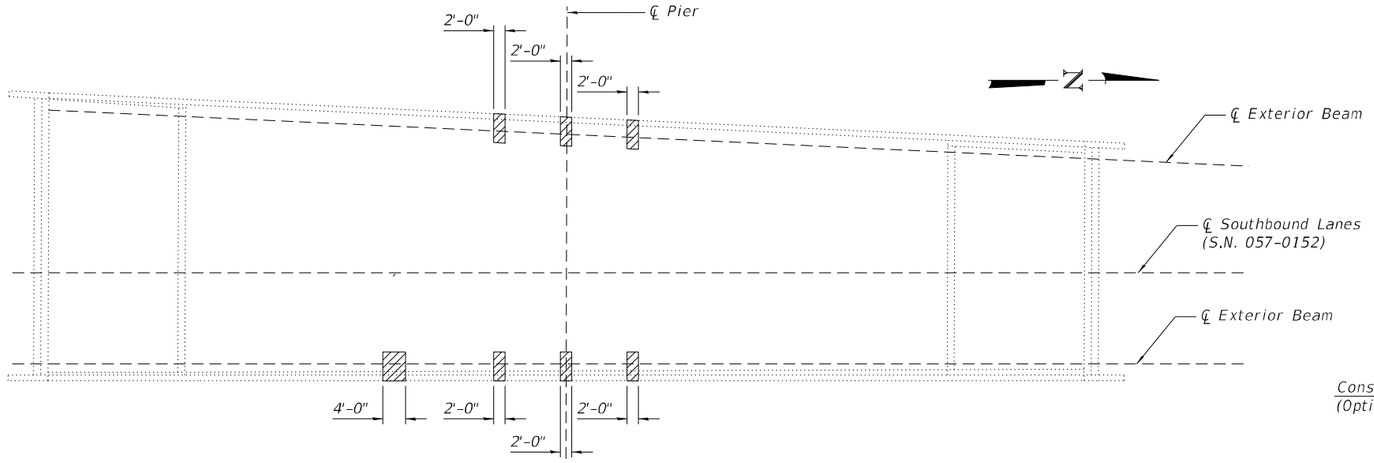

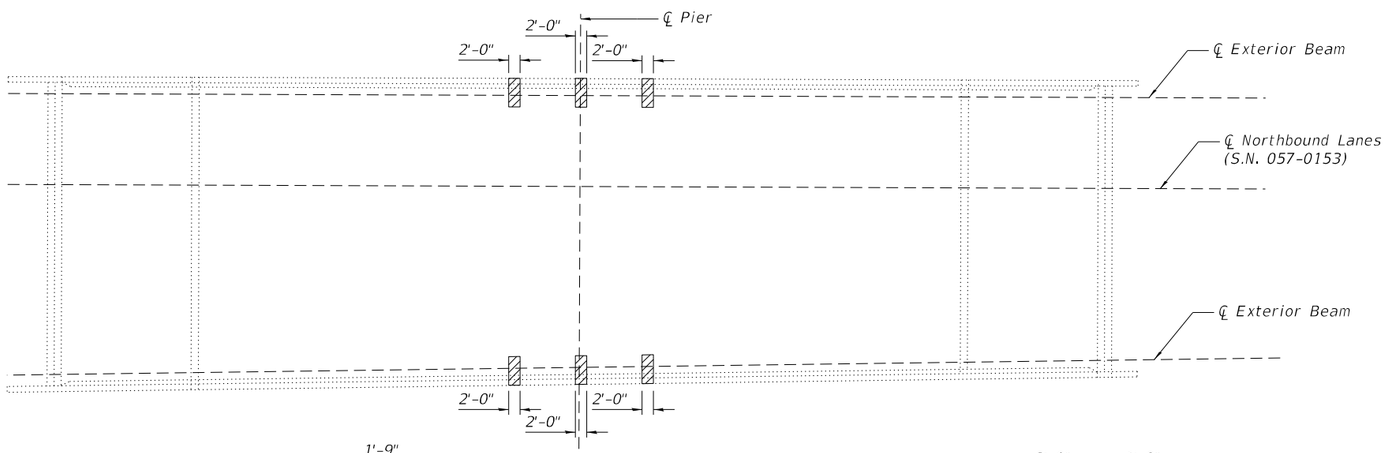

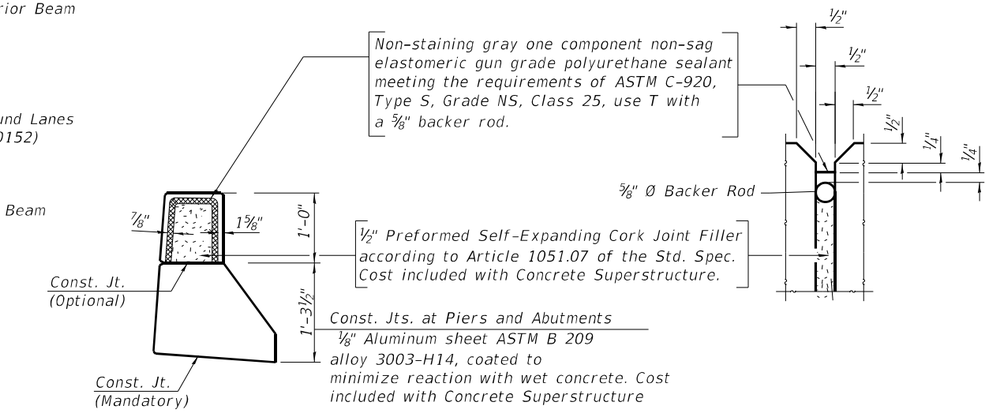

PARAPET JOINT DETAILS

NOTES:

The Rail Posts within the parapet removal and replacement limits shall be removed to allow for the repair work to be completed. Following completion of the parapet ends, the Rail Posts shall be re-attached. It is the option of the Contractor to either save and reuse the existing cast-in-place anchor system or use epoxy-grouted threaded rods. The cost of this work shall be included in Concrete Superstructure. See As-Built Plans for aluminum railing detail.

Areas of Concrete Removal and Superstructure were identified July 28, 2020. The Engineer shall determine if additional areas require removal and replacement at time of construction.

The cost of the work to replace parapet joints shall be included in Concrete Superstructure.

Concrete Removal &
Concrete Superstructure

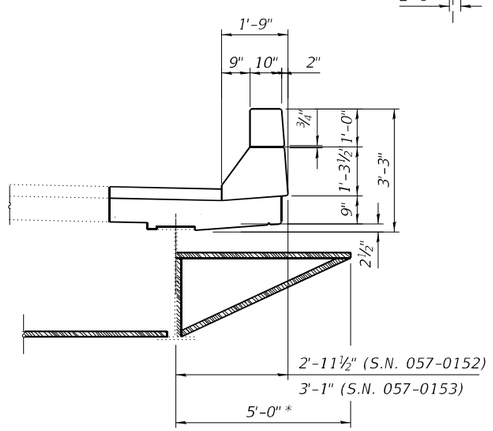

PROTECTIVE SHIELD

* Shield under parapet is shown as suggestion only. Pay Limit for Protective Shield is center-to-center fascia beams.

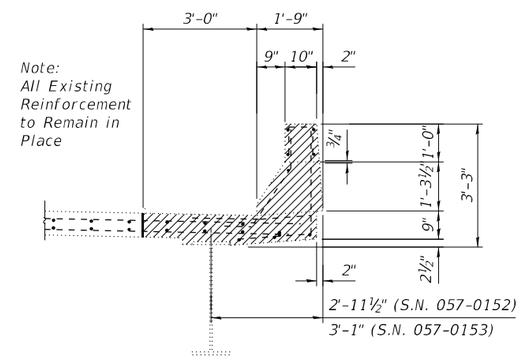

PARAPET REMOVAL

BILL OF MATERIAL

Structure	Item	Unit	Total
057-0152	Concrete Removal	Cu. Yd.	3.6
	Concrete Superstructure	Cu. Yd.	3.6
057-0153	Concrete Removal	Cu. Yd.	2.7
	Concrete Superstructure	Cu. Yd.	2.7

MODEL: Parapet Repair Plan
FILE NAME: P:\Effingham\3454 - PTB 189 IDOT D5 VA\Work Order #6\Cadd\Sheet\152 & 153\D570D64_0152_0153_Combined.dgn

CDI CIVIL DESIGN, INC. WBE / DBE
EFFINGHAM, IL
LICENSE #184.003222

USER NAME =	DESIGNED - KAS	REVISED -	
	CHECKED - TJZ	REVISED -	
PLOT SCALE =	DRAWN - DWS	REVISED -	
PLOT DATE =	CHECKED - KAS	REVISED -	

STATE OF ILLINOIS
DEPARTMENT OF TRANSPORTATION

PARAPET REPAIR PLAN
S.N. 057-0152 (SB) & S.N. 057-0153 (NB)
SHEET 11 OF 26 SHEETS

F.A.I. RTE.	SECTION	COUNTY	TOTAL SHEETS	SHEET NO.
55	(57-1,57-2)BDS	MCLEAN	88	31
		CONTRACT NO. 70D64		
		ILLINOIS	FED. AID PROJECT	

10/21/2021 2:52:33 PM

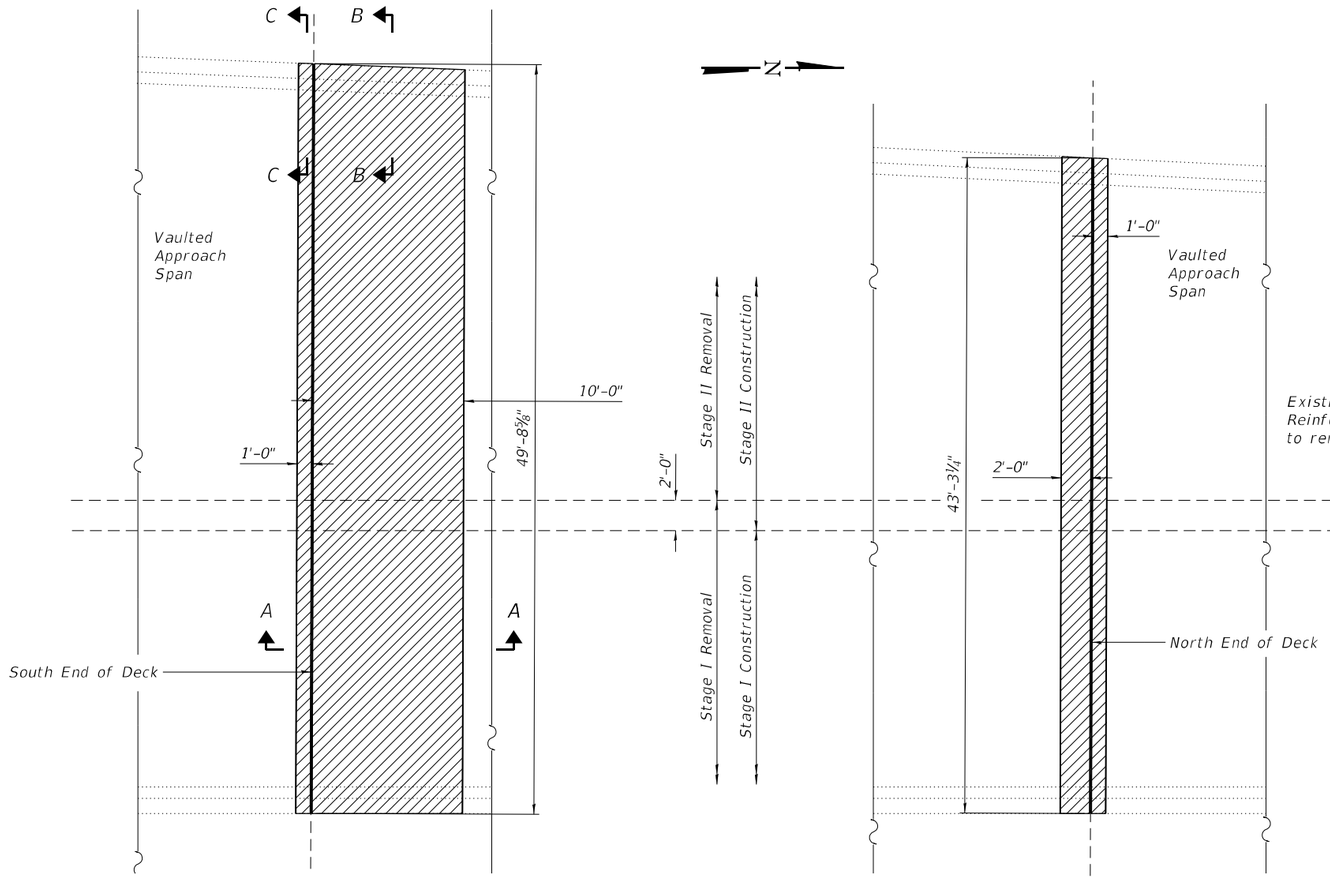

PLAN

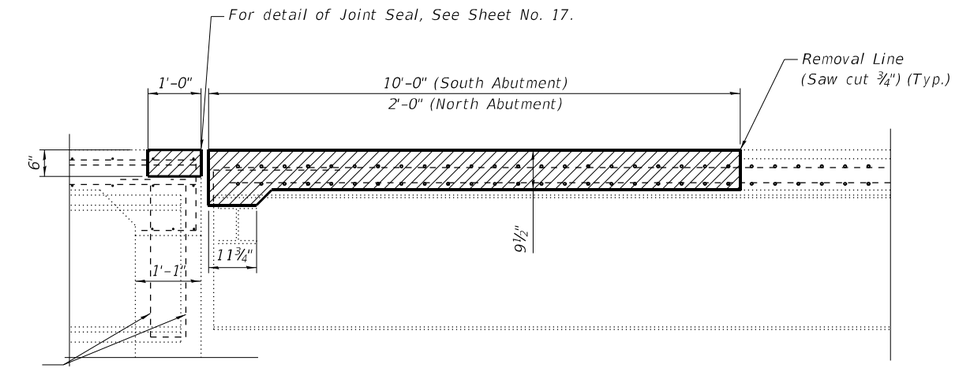

SECTION A-A

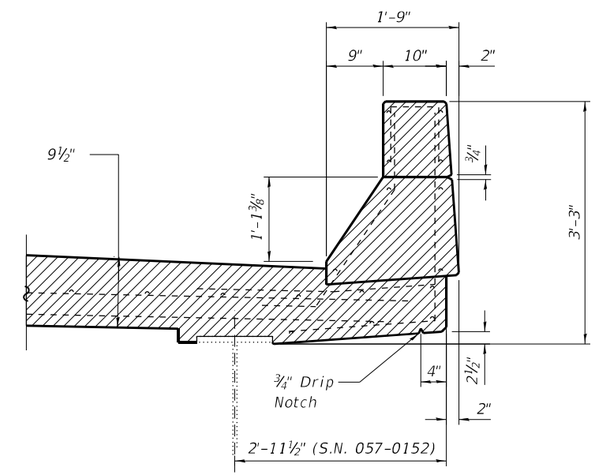

SECTION B-B

Concrete Removal

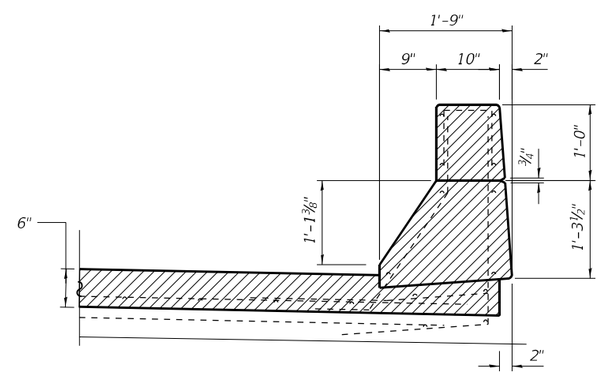

SECTION C-C

NOTES:

Existing reinforcement bars extending into the removal area shall be cleaned, straightened and incorporated into the New Construction. Any reinforcement bars that are damaged during Concrete Removal shall be replaced with an approved bar splicer or anchorage system. Cost included with Concrete Removal.

The existing expansion joint system shall be removed completely, as well as any foreign material that has accumulated or been placed in the joint openings. The cost for this work is included in Concrete Removal and no addtitional compensation will be allowed.

The handrail attached to the top of the parapets shall be unbolted to allow for the removal and placement of the parapet ends. Following completion of the parapet ends, the handrail shall be re-attached. The cost of this work shall be included in Concrete Superstructures.

All existing deck tie downs shall be removed. Cost included with Concrete Removal.

BILL OF MATERIAL

Structure	Item	Unit	Total
057-0152	Concrete Removal	Cu. Yd.	24.1

MODEL: Concrete Removal Details
FILE NAME: P:\Effingham\3454 • PTB 189 IDOT D5 V-V\Work Order #6\Cadd\Sheet\152 & 153\D570D64_0152_0153_Combined.dgn
11/29/2021 12:17:19 PM

CDI CIVIL DESIGN, INC. WBE / DBE EFFINGHAM, IL LICENSE #184.003222

USER NAME =	DESIGNED - KAS	REVISED -	
	CHECKED - TJZ	REVISED -	
PLOT SCALE =	DRAWN - DWS	REVISED -	
PLOT DATE =	CHECKED - KAS	REVISED -	

STATE OF ILLINOIS
DEPARTMENT OF TRANSPORTATION

SUPERSTRUCTURE PLAN – CONCRETE REMOVAL DETAILS
S.N. 057-0152 (SB)

SHEET 12 OF 26 SHEETS

F.A.I. RTE.	SECTION	COUNTY	TOTAL SHEETS	SHEET NO.
55	(57-1,57-2)BDS	MCLEAN	88	32

CONTRACT NO. 70D64

ILLINOIS FED. AID PROJECT

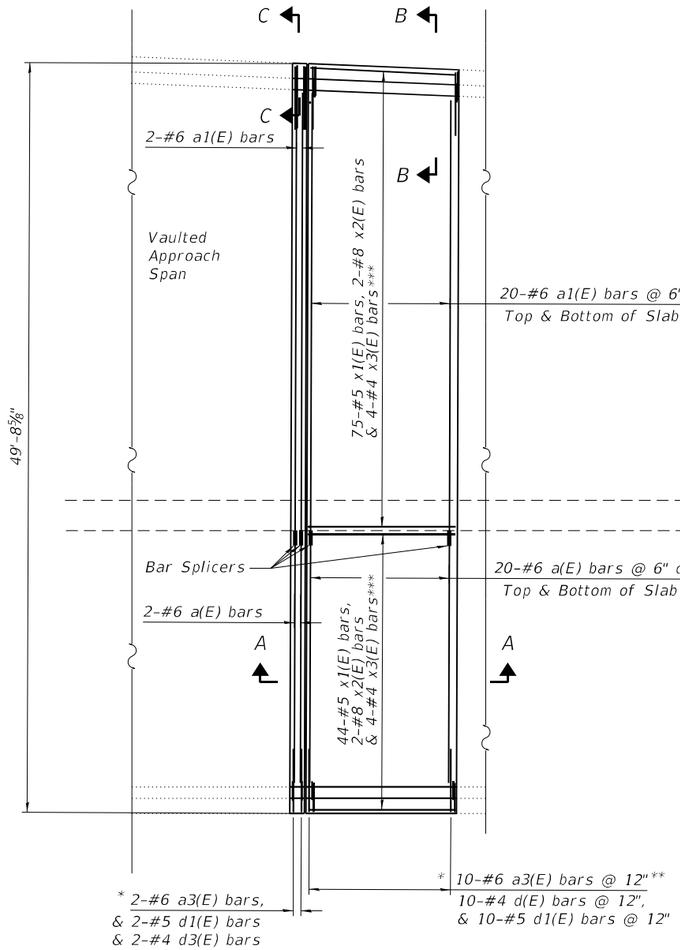

PLAN

*Typical east and west sides of bridge deck
**Lapped with alt. a(E) or a1(E) bars
***Lap with existing longitudinal bars in slab and parapet

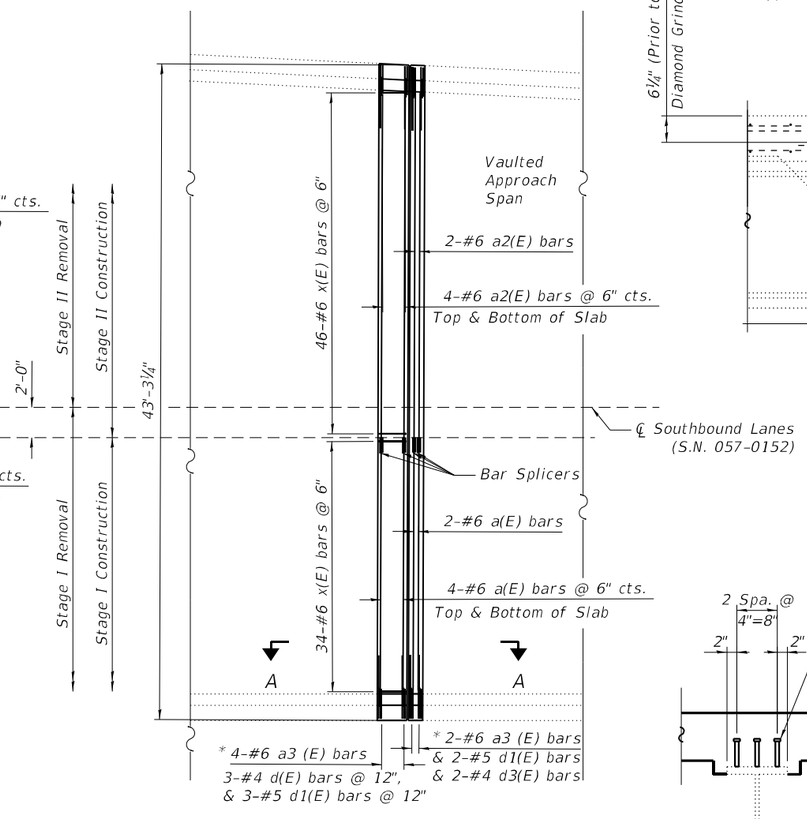

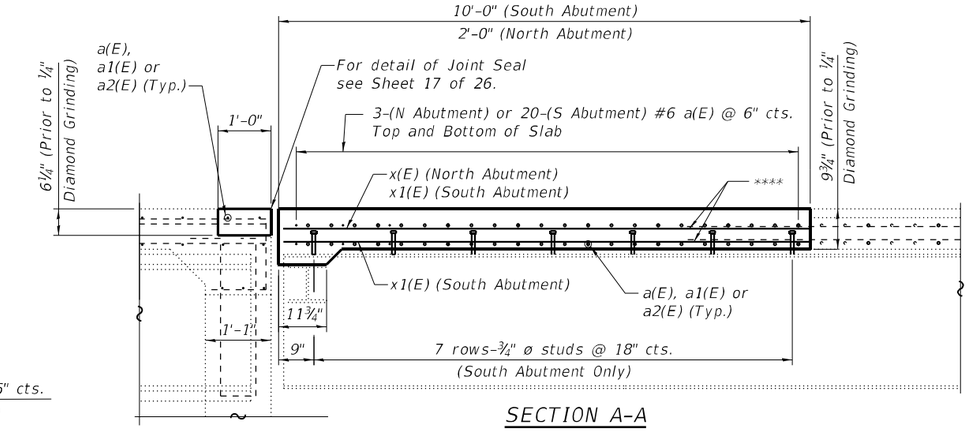

SECTION A-A

NOTES:

Reinforcement bars designated (E) shall be epoxy coated.

The parapet shall be removed on the deck side and approach side as shown.

The aluminum railing post shall be temporarily removed and re-erected in the areas of parapet removal. Cost included with Concrete Superstructure. Any portion of railing that is damaged during construction shall be replaced at the Contractor's expense.

Two d2(E) bars shall be set in proposed parapet under each rail post.

**** At South Abutment cut existing longitudinal bars in slab and parapet with 3'-6" (#4 & #5 bars) or 5'-11" (#8 bars) projection and lap with x(E), x1(E), or x2(E) bars.

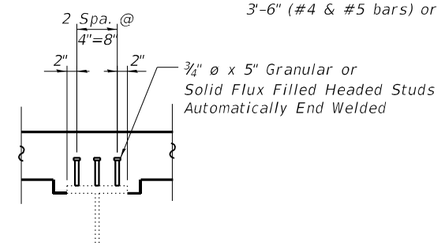

SECTION AT BEAM END

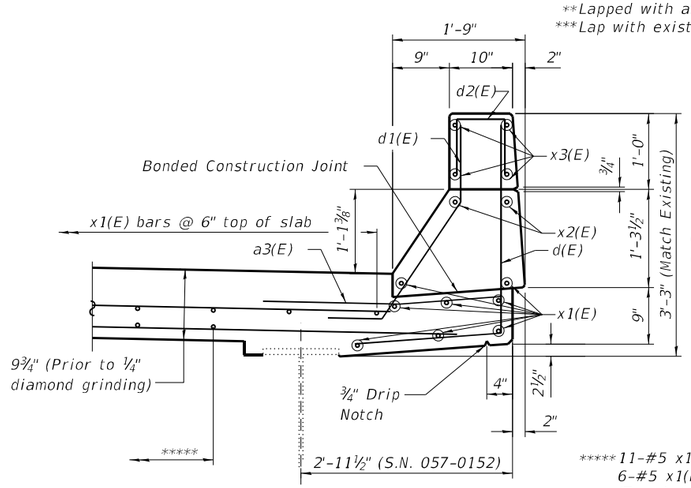

SECTION B-B

*****11-#5 x1(E) bars equally spa. btwn. flared beams & 6-#5 x1(E) bars equally spa. btwn. unflared beams (Typ. bottom of slab)

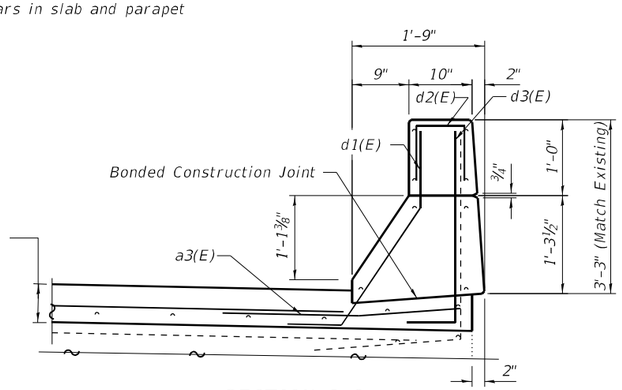

SECTION C-C

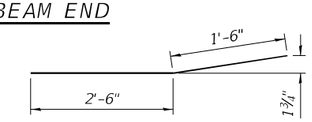

a3(E)

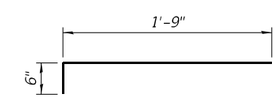

x(E)

Min. Bar Lap
#4 = 2'-5"
#5 = 3'-6"
#8 = 5'-11"

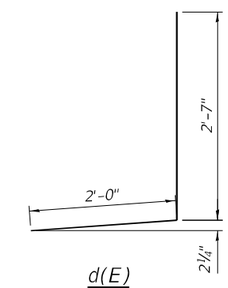

d(E)

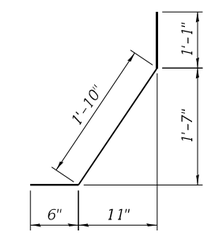

d1(E)

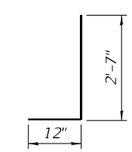

d3(E)

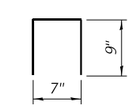

d2(E)

BILL OF MATERIAL

S.N. 057-0152

Bar	No.	Size	Length	Shape
a(E)	52	#6	19'-3"	
a1(E)	42	#6	27'-0"	
a2(E)	10	#6	20'-6"	
a3(E)	34	#6	4'-0"	
d(E)	26	#4	4'-7"	
d1(E)	34	#5	3'-5"	
d2(E)	12	#4	2'-1"	
d3(E)	8	#4	3'-7"	
x(E)	80	#6	2'-3"	
x1(E)	119	#5	9'-10"	
x2(E)	4	#8	9'-10"	
x3(E)	8	#4	9'-10"	
Reinforcement Bars, Epoxy Coated			Pound	5600
Concrete Superstructure			Cu. Yd.	24.1

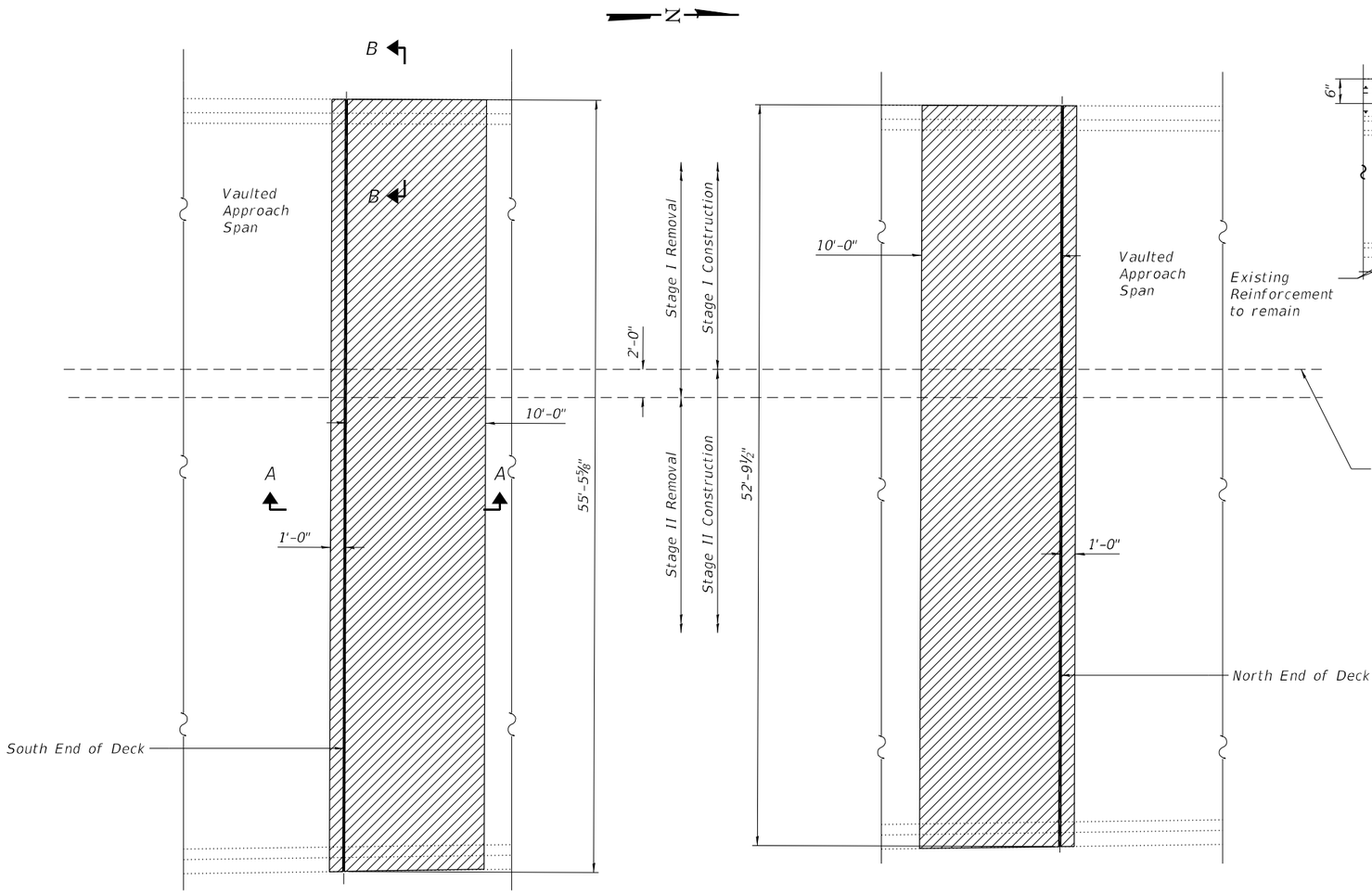

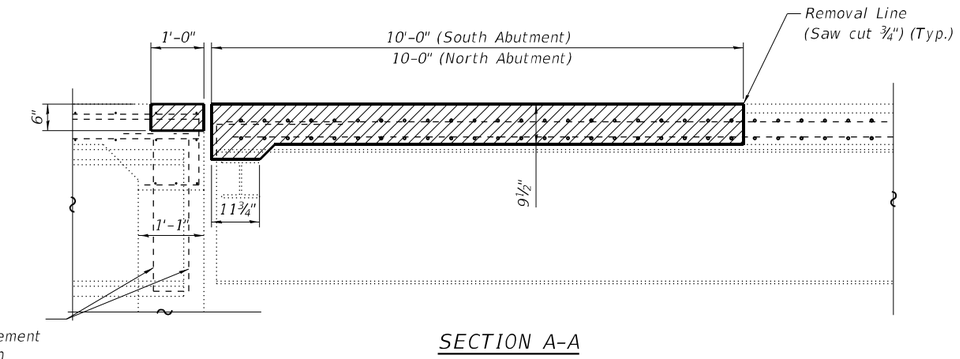

SECTION A-A

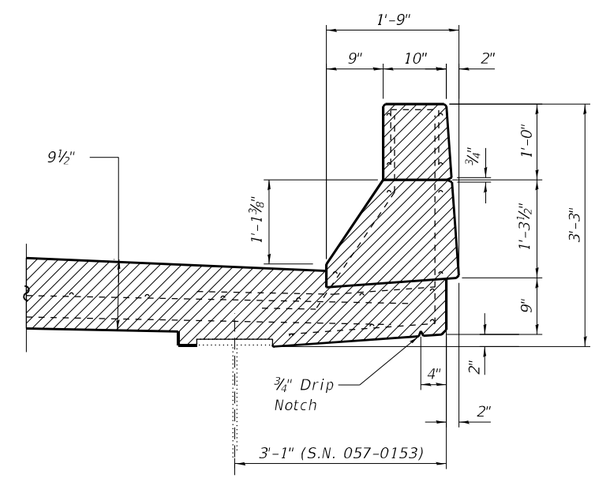

SECTION B-B

Concrete Removal

PLAN

NOTES:

Existing reinforcement bars extending into the removal area shall be cleaned, straightened and incorporated into the New Construction. Any reinforcement bars that are damaged during Concrete Removal shall be replaced with an approved bar splicer or anchorage system. Cost included with Concrete Removal.

The existing expansion joint system shall be removed completely, as well as any foreign material that has accumulated or been placed in the joint openings. The cost for this wark is included in Concrete Removal and no addtitional compensation will be allowed.

The handrail attached to the top of the parapets shall be unbolted to allow for the removal and placement of the parapet ends. Following completion of the parapet ends, the handrail shall be re-attached. The cost of this work shall be included in Concrete Superstructures.

All existing deck tie downs shall be removed. Cost included with Concrete Removal.

BILL OF MATERIAL

Structure	Item	Unit	Total
057-0153	Concrete Removal	Cu. Yd.	41.6

MODEL: Concrete Removal Details-2
FILE NAME: P:\Effingham\3454 • PTB 189 IDOT D5 VAV\Work Order #6\Cadd\Sheet\152 & 153\D570D64_0152_0153_Combined.dgn

11/29/2021 12:18:39 PM

CIVIL DESIGN, INC.
WBE / DBE
EFFINGHAM, IL
LICENSE #184.003222

USER NAME =	DESIGNED - KAS	REVISED -	
	CHECKED - TJZ	REVISED -	
PLOT SCALE =	DRAWN - DWS	REVISED -	
PLOT DATE =	CHECKED - KAS	REVISED -	

STATE OF ILLINOIS
DEPARTMENT OF TRANSPORTATION

SUPERSTRUCTURE PLAN – CONCRETE REMOVAL DETAILS
S.N. 057-0153 (NB)

SHEET 14 OF 26 SHEETS

F.A.I. RTE.	SECTION	COUNTY	TOTAL SHEETS	SHEET NO.
55	(57-1,57-2)BDS	MCLEAN	88	34

CONTRACT NO. 70D64

ILLINOIS FED. AID PROJECT

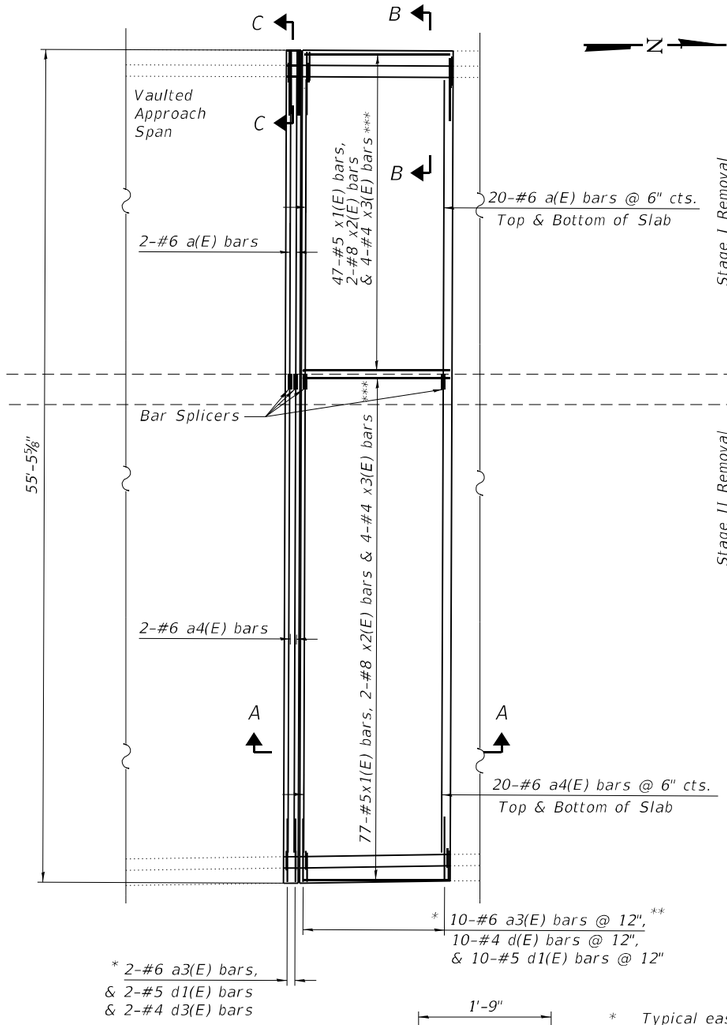

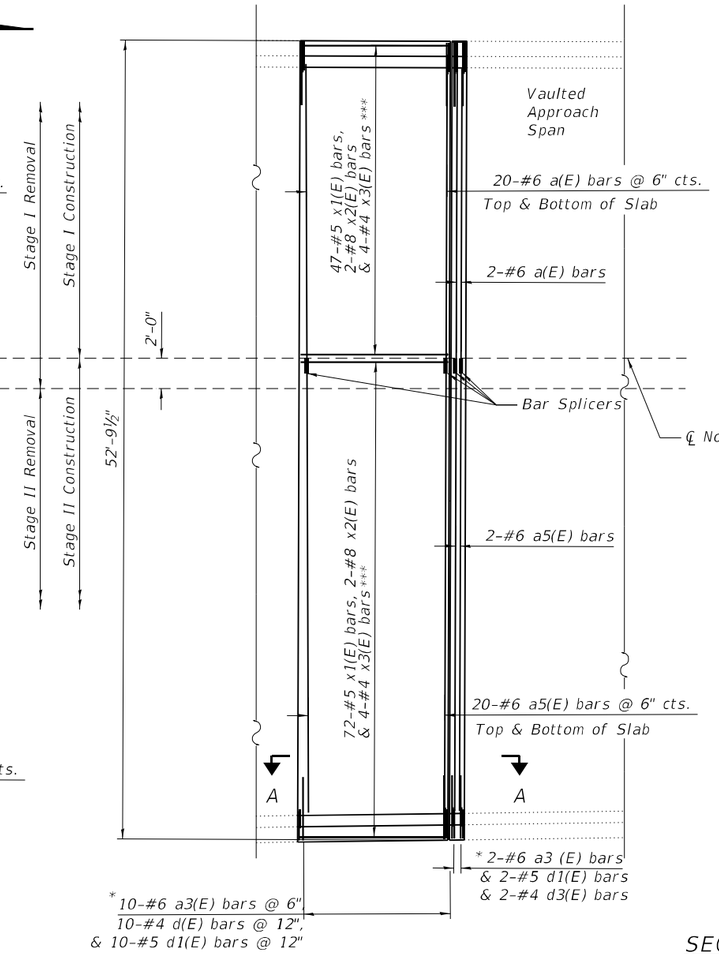

PLAN

* Typical east and west sides of bridge deck
** Lap with alt. a(E) or a1(E) bars
*** Lap with existing longitudinal bars in slab and parapet

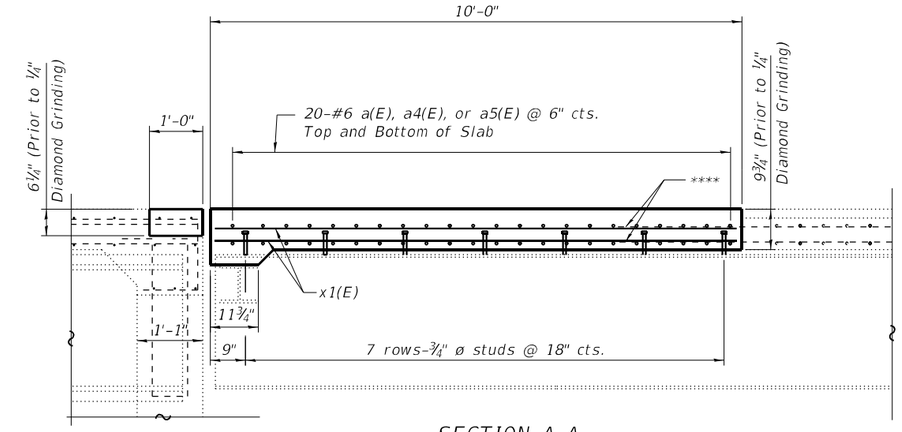

SECTION A-A

NOTES:

Reinforcement bars designated (E) shall be epoxy coated.

The parapet shall be removed on the deck side and approach side as shown.

The aluminum railing post shall be temporarily removed and re-erected in the areas of parapet removal. Cost included with Concrete Superstructure. Any portion of railing that is damaged during construction shall be replaced at the Contractor's expense.

Two d2(E) bars shall be set in proposed parapet under each rail post.

**** Cut existing longitudinal bars in slab and parapet with 3'-6" (#4 & #5 bars) or 5'-11" (#8 bars) projection and lap with x1(E), x2(E) or x3(E) bars.

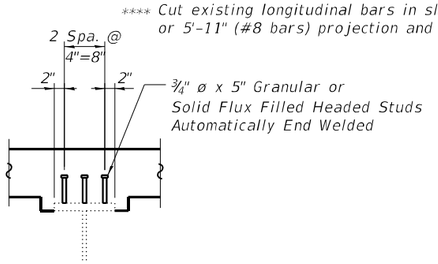

SECTION AT BEAM END

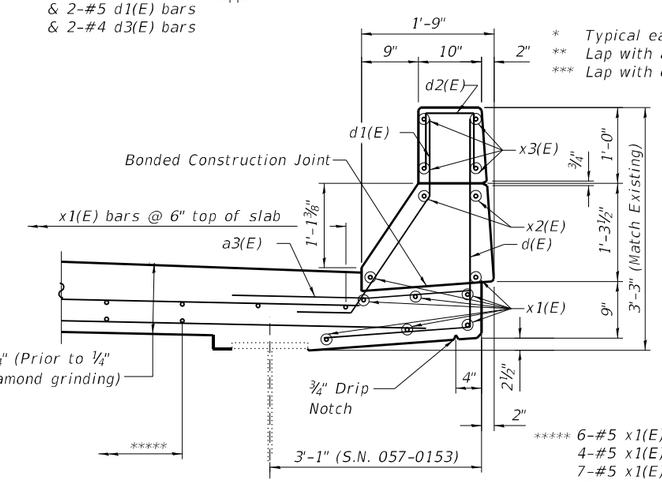

SECTION B-B

***** 6-#5 x1(E) bars equally spa. btwn. flared beams (S. Abutment)
4-#5 x1(E) bars equally spa. btwn. flared beams (N. Abutment) &
7-#5 x1(E) bars equally spa. btwn. unflared beams
(Typ. bottom of slab)

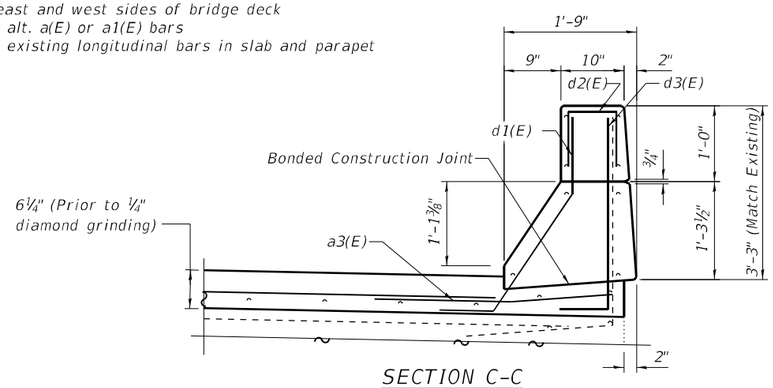

SECTION C-C

Min. Bar Lap
#4 = 2'-5"
#5 = 3'-6"
#8 = 5'-11"

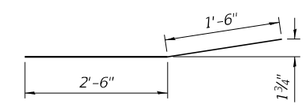

a3(E)

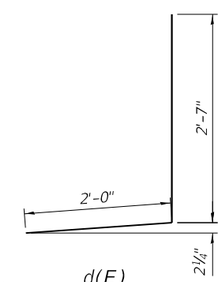

d(E)

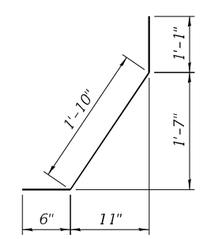

d1(E)

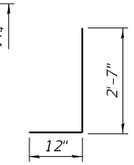

d3(E)

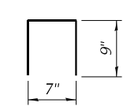

d2(E)

BILL OF MATERIAL

S.N. 057-0153

Bar	No.	Size	Length	Shape
a(E)	88	#6	19'-3"	
a3(E)	88	#6	4'-0"	
a4(E)	44	#6	32'-9"	
a5(E)	44	#6	30'-0"	
d(E)	40	#4	4'-7"	
d1(E)	48	#5	3'-5"	
d2(E)	12	#4	2'-1"	
d3(E)	8	#4	3'-7"	
x1(E)	243	#5	9'-10"	
x2(E)	8	#8	9'-10"	
x3(E)	16	#4	9'-10"	
Reinforcement Bars, Epoxy Coated			Pound	10130
Concrete Superstructure			Cu. Yd.	41.6

MODEL: Deck Reinforcement-2
FILE NAME: P:\Effingham\3454 - PTB 189 IDOT D5 V-A\Work Order #6\Cadd\Sheet\152 & 153\D570D64_0152_0153_Combined.dgn
12/6/2021 7:22:42 AM

CDI CIVIL DESIGN, INC. WBE / DBE
EFFINGHAM, IL
LICENSE #184.003222

USER NAME =	DESIGNED - KAS	REVISED -	
	CHECKED - TJZ	REVISED -	
PLOT SCALE =	DRAWN - DWS	REVISED -	
PLOT DATE =	CHECKED - KAS	REVISED -	

STATE OF ILLINOIS
DEPARTMENT OF TRANSPORTATION

SUPERSTRUCTURE PLAN – DECK REINFORCEMENT DETAILS
S.N. 057-0153 (NB)
SHEET 15 OF 26 SHEETS

F.A.I. RTE.	SECTION	COUNTY	TOTAL SHEETS	SHEET NO.
55	(57-1,57-2)BDS	MCLEAN	88	35
		CONTRACT NO. 70D64		
		ILLINOIS FED. AID PROJECT		

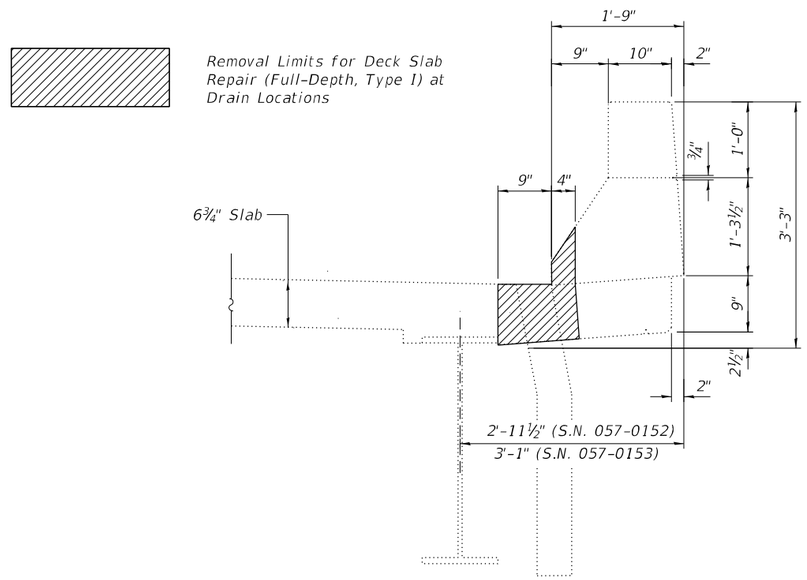

TYPICAL REMOVAL LIMITS

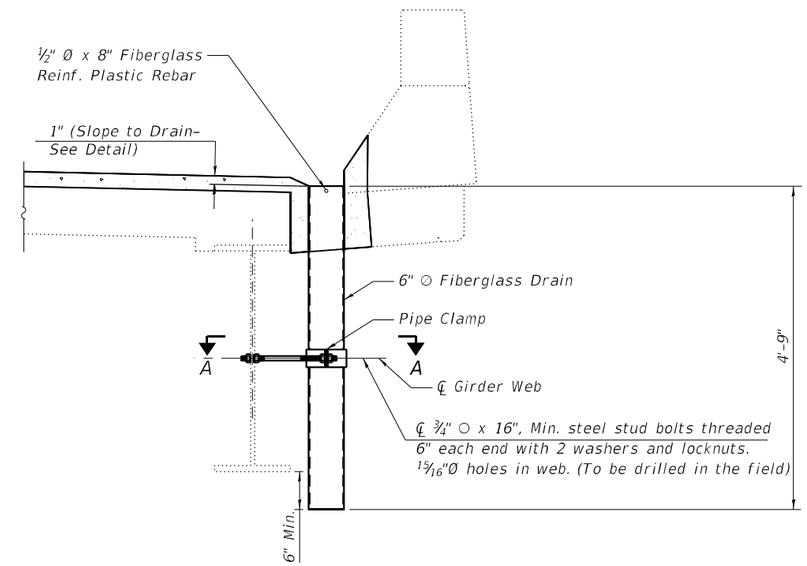

NEW FLOOR DRAIN INSTALLATION

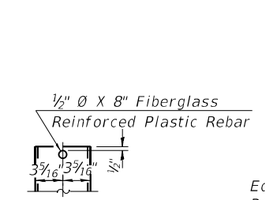

FIBERGLASS PIPE

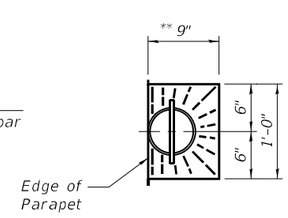

TOP PLAN

** Slope to Drain

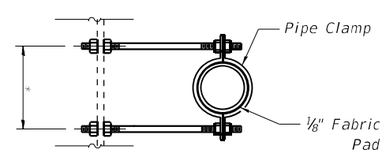

SECTION A-A

* Dimension as required by Pipe Clamp

Notes:

All dimensions shall be field verified by the Contractor prior to ordering of materials.

Fiberglass shall conform to ASTM 02996, with short-time rupture strength hoop tensile stress of 30,000 psi minimum.

The exterior surfaces of the floor drains shall be painted according to Article 506 with the finish coat as specified.

The exterior surfaces of the drains shall be cleaned according to the Society of Protective Coating Spec. SSPC-SP1 prior to painting.

The clamping device shall be galvanized according to AASHTO M 232. Cost of clamping device included with Floor Drains.

BILL OF MATERIAL

Structure	Item	Unit	Total
057-0152	Floor Drains	Each	4
057-0153	Floor Drains	Each	4

Cost of removal of existing drains and extensions is included in Deck Slab Repair (Full Depth, Type I)

MODEL: Floor Drain
FILE NAME: P:\Effingham\3454 - PTB 189 IDOT D5 VAV\Work Order #6\Cadd\Sheets\152 & 153\D570D64_0152_0153_Combined.dgn

CDI CIVIL DESIGN, INC. WBE / DBE EFFINGHAM, IL LICENSE #184.003222

USER NAME =	DESIGNED - KAS	REVISED -	
	CHECKED - TJZ	REVISED -	
PLOT SCALE =	DRAWN - DWS	REVISED -	
PLOT DATE =	CHECKED - KAS	REVISED -	

STATE OF ILLINOIS
DEPARTMENT OF TRANSPORTATION

FLOOR DRAIN DETAILS
S.N. 057-0152 (SB) & S.N. 057-0153 (NB)

SHEET 16 OF 26 SHEETS

F.A.I. RTE.	SECTION	COUNTY	TOTAL SHEETS	SHEET NO.
55	(57-1,57-2)BDS	MCLEAN	88	36

CONTRACT NO. 70D64

ILLINOIS FED. AID PROJECT

11/29/2021 12:19:54 PM

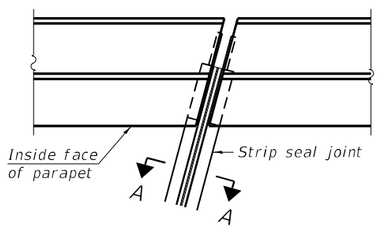

PLAN AT PARAPET

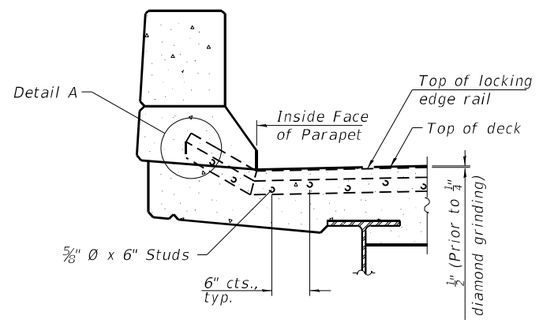

ELEVATION AT PARAPET

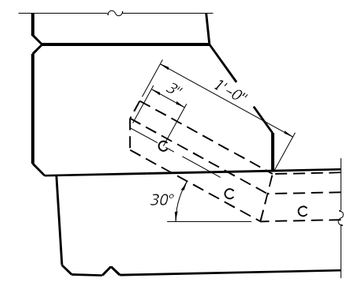

DETAIL A

Notes:

The strip seal shall be made continuous and shall have a minimum thickness of 1/4". The configuration of the strip seal shall match the configuration of the locking edge rails. Open or "webbed" strip seal gland configurations are not permitted. The gland shall be sized for a maximum rated movement of 4 inches.

The locking edge rails depicted are configured for typical applications and are conceptual only. The actual configuration of the locking edge rails and matching strip seal may vary from manufacturer to manufacturer provided they fit the application and meet the minimum anchorage shown. Flanged edge rails, however, will not be allowed. Locking edge rails may exceed the 4 1/2" maximum depth provided the anchorage system is revised according to the manufacturer's recommendation.

The manufacturer's recommended installation methods shall be followed.

All steel components shall be galvanized after fabrication according to Article 520.03 of the Standard Specifications.

The Maximum space between locking edge rail segments shall be 3/16" and sealed with a suitable sealant; however, any rail joint within 10' measured perpendicular to the face of the curb or parapet shall be welded as shown in the locking edge rail splice detail.

The concrete opening below the strip seal will vary based on the locking edge rail chosen by the Contractor. Deck and parapet lengths shown elsewhere in the plans are dimensioned to the concrete opening, not the joint opening, and are based on the rolled locking edge rail. If the Contractor elects to use a different locking edge rail, dimensional adjustments may be required. One exception to this would be the strip seal joint at the end of the precast bridge approach slab. For these cases the pavement connector length shall be adjusted, not the length of the bridge approach slab.

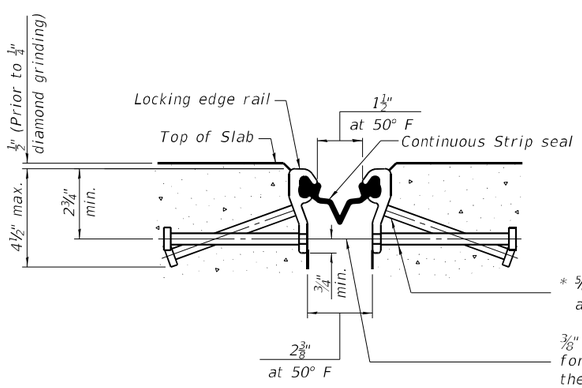

SHOWING ROLLED RAIL JOINT

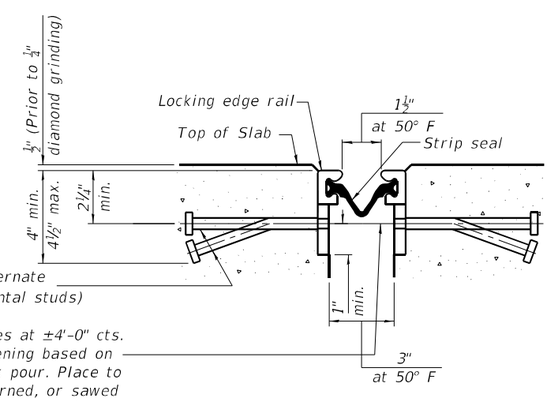

SHOWING WELDED RAIL JOINT

* 5/8" Ø x 6" studs @ 6" cts. (alternate angled/bent studs with horizontal studs)

3/8" ϕ threaded rods in 7/16" ϕ holes at ±4'-0" cts. for holding the proper joint opening based on the temperature during the deck pour. Place to miss studs. All rods shall be burned, or sawed off flush with the plates after concrete is set.

SECTION A-A

* Granular or solid flux filled headed studs conforming to Article 1006.32 of the Std. Specs., automatically end welded.

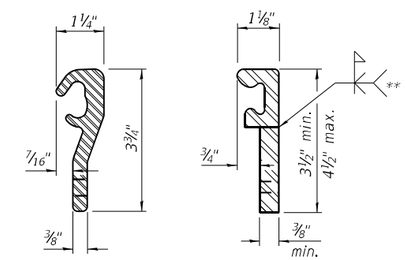

ROLLED (EXTRUDED) RAIL

WELDED RAIL

LOCKING EDGE RAILS

** Back gouge not required if complete joint penetration is verified by mock-up.

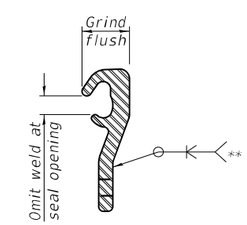

LOCKING EDGE RAIL SPLICE

The inside of the locking edge rail groove shall be free of weld residue. Rolled rail shown, welded rail similar.

BILL OF MATERIAL

Structure	Item	Unit	Total
057-0152	Preformed Joint Strip Seal	Foot	91
057-0153	Preformed Joint Strip Seal	Foot	106

MODEL: Joint Strip Seal Details
FILE NAME: P:\Effingham\3454 - PTB 189 IDOT D5 VA\Work Order #6\Cadd\Sheet\152 & 153\D570D64_0152_0153_Combined.dgn

CIVIL DESIGN, INC.
WBE / DBE
EFFINGHAM, IL
LICENSE #184.003222

USER NAME =	DESIGNED - KAS	REVISED -	
	CHECKED - TJZ	REVISED -	
PLOT SCALE =	DRAWN - DWS	REVISED -	
PLOT DATE =	CHECKED - KAS	REVISED -	

STATE OF ILLINOIS
DEPARTMENT OF TRANSPORTATION

PREFORMED JOINT STRIP SEAL DETAILS
S.N. 057-0152 (SB) & S.N. 057-0153 (NB)

SHEET 17 OF 26 SHEETS

F.A.I. RTE.	SECTION	COUNTY	TOTAL SHEETS	SHEET NO.
55	(57-1,57-2)BDS	MCLEAN	88	37

CONTRACT NO. 70D64

ILLINOIS FED. AID PROJECT

11/29/2021 12:20:36 PM

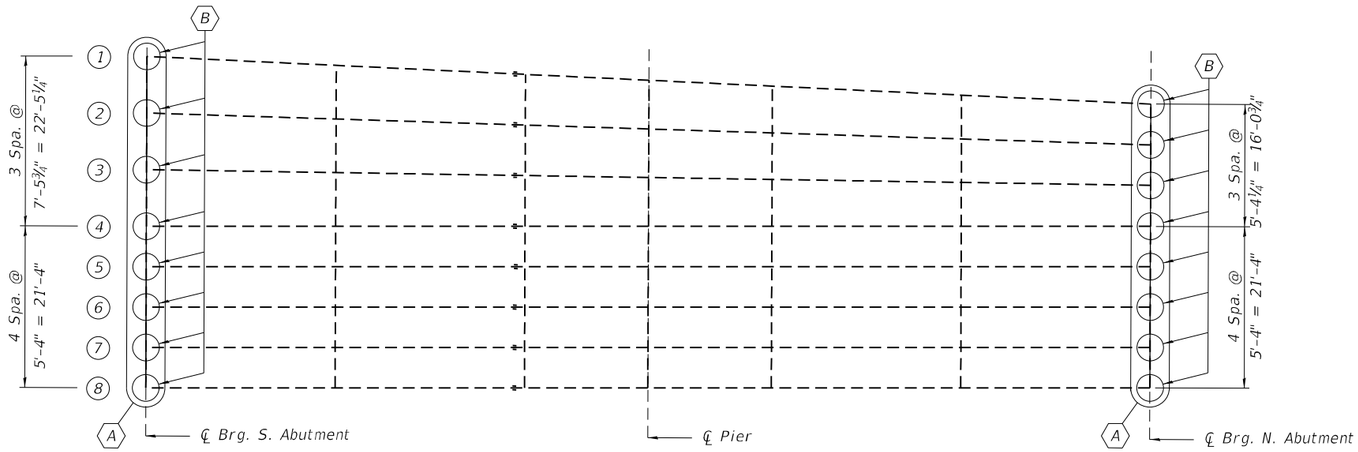

FRAMING PLAN - S.N. 057-0152 (SB)

N

(A) Diaphragm Replacement (Furnishing and Erecting Structural Steel and Structural Steel Removal)

(B) Beam End Repair (Structural Steel Repair)

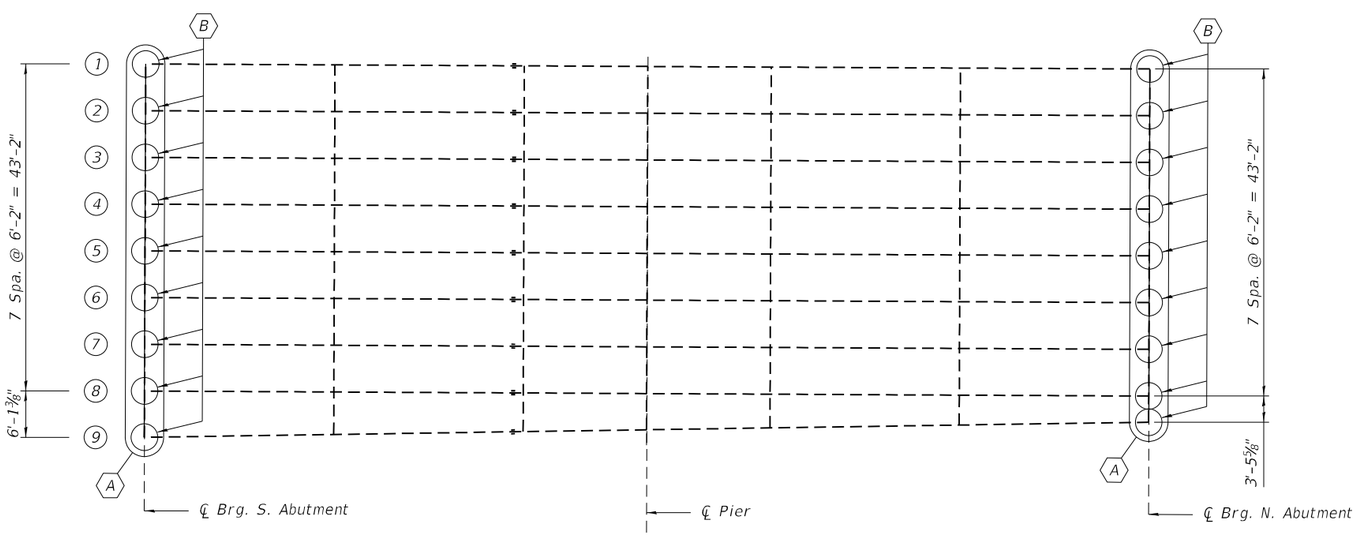

FRAMING PLAN - S.N. 057-0153 (NB)

(A) Diaphragm Replacement (Furnishing and Erecting Structural Steel and Structural Steel Removal)

(B) Beam End Repair (Structural Steel Repair)

NOTES:

All structural steel shall conform to AASHTO Classification M-270 GR. 36, unless otherwise noted.

Fasteners shall be high strength bolts. Bolts ¾"Ø, open holes 13/16"Ø, unless otherwise noted.

Diaphragm connection holes shall be 13/16"Ø for ¾"Ø bolts. Two hardened washers shall be required at diaphragm connections.

Plan dimensions and details relative to existing plans are subject to nominal construction variations. The Contractor shall field verify existing dimensions and details affecting new construction and make necessary approved adjustments prior to construction or ordering of materials. Such variations shall not be cause for additional compensation for a change in scope of the work, however, the Contractor will be paid for the quanity actually furnished at the unit price bid for the work.

Existing structural steel that will be in contact with new structural steel shall be cleaned and painted prior to erection as required by the GBSP "Cleaning and Painting Contact Surface Areas of Existing Steel Structures".

All structural steel shall be hot-dip galvanized. See Special Provisions for "Hot Dip Galvanizing For Structural Steel."

Cost of removal and re-installation of all members necessary to complete the work as detailed on the plans and as specified in the Special Provisions shall be included with Furnishing and Erecting Structural Steel.

BILL OF MATERIAL

Structure	Item	Unit	Total
057-0152	Structural Steel Repair*	Pound	3250
	Furnishing and Erecting Structural Steel	Pound	3780
	Structural Steel Removal	Pound	3780
	Stud Shear Connectors	Each	216
057-0153	Structural Steel Repair*	Pound	3630
	Furnishing and Erecting Structural Steel	Pound	4410
	Structural Steel Removal	Pound	4410
	Stud Shear Connectors	Each	378

* Beam End Repairs only

Note:
For shear stud locations, see Sheets 13 and 15 of 26.

MODEL: Beam End Repairs
FILE NAME: P:\Effingham\3454 - PTB 189 IDOT D5 VA\Work Order #6\Cadd\Sheet\152 & 153\D70D64_0152_0153_Combined.dgn

CIVIL DESIGN, INC.
WBE / DBE
EFFINGHAM, IL
LICENSE #184.003222

USER NAME =	DESIGNED - KAS	REVISED -	
	CHECKED - TJZ	REVISED -	
PLOT SCALE =	DRAWN - DWS	REVISED -	
PLOT DATE =	CHECKED - KAS	REVISED -	

STATE OF ILLINOIS
DEPARTMENT OF TRANSPORTATION

DIAPHRAGM REPLACEMENT & BEAM END REPAIR LOCATIONS
S.N. 057-0152 (SB) & S.N. 057-0153 (NB)

SHEET 18 OF 26 SHEETS

F.A.I. RTE.	SECTION	COUNTY	TOTAL SHEETS	SHEET NO.
55	(57-1,57-2)BDS	MCLEAN	88	38

CONTRACT NO. 70D64

ILLINOIS FED. AID PROJECT

12/6/2021 7:12:47 AM

Bridge Number	Beam Number	North Abutment				South Abutment			
		A	B	C	D	A	B	C	D
057-0152	1	11	4	1'-9"	3'-1½"	11	4	1'-9"	3'-1½"
	2	11	3	1'-7¾"	3'-1½"	11	3	1'-7¼"	3'-1½"
	3	10	3	1'-6½"	2'-11"	10	2	1'-5¼"	2'-11"
	4	10	2	1'-5½"	2'-11"	9	2	1'-4"	2'-8½"
	5	10	2	1'-4½"	2'-11"	9	1	1'-2¾"	2'-8½"
	6	10	2	1'-5½"	2'-11"	9	2	1'-3¾"	2'-8½"
	7	10	3	1'-6½"	2'-11"	10	2	1'-4¾"	2'-11"
	8	11	3	1'-7¾"	3'-1½"	10	3	1'-6"	2'-11"
057-0153	1	10	2	1'-5¼"	2'-11"	10	2	1'-4½"	2'-11"
	2	9	2	1'-4"	2'-8½"	9	2	1'-3¼"	2'-8½"
	3	9	1	1'-2¾"	2'-8½"	9	1	1'-2"	2'-8½"
	4	9	1	1'-2½"	2'-8½"	9	1	1'-3¾"	2'-8½"
	5	9	2	1'-3¾"	2'-8½"	9	1	1'-3"	2'-8½"
	6	10	2	1'-5"	2'-11"	10	2	1'-4½"	2'-11"
	7	10	3	1'-6½"	2'-11"	10	3	1'-6"	2'-11"
	8	11	3	1'-8"	3'-1½"	11	3	1'-7½"	3'-1½"
	9	11	4	1'-9"	3'-1½"	11	4	1'-9"	3'-1½"

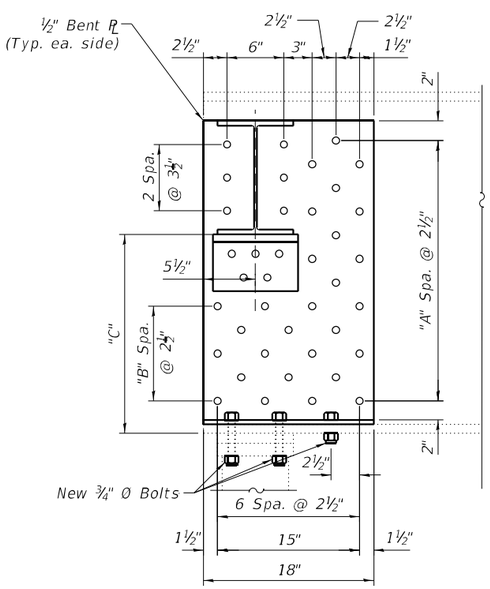

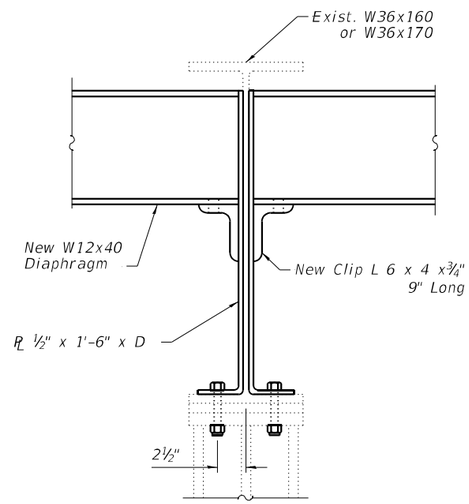

BEAM END REPAIR

(Diaphragm lengths vary. See Sheet 18 of 26)

Notes:

All structural steel shall be AASHTO M270 Grade 36, unless otherwise noted.

Cost of furnishing and erecting steel diaphragms and diaphragm support angles shall be included with Furnishing and Erecting Structural Steel.

Cost of furnishing and erecting steel for beam end repairs shall be included with Structural Steel Repair.

Cost of drilling holes in existing steel members is included with Structural Steel Repair.

Removal of existing diaphragm support angles and diaphragms shall be included in Structural Steel Removal.

Existing L 6"x4"x¾" shall be removed by the air-arc method and grind smooth all weld material remaining on the web.

Omit diaphragm support angle on outside faces of exterior beams.

All holes in existing steel shall be field drilled using shop drilled holes in new steel as a template, except as noted. Holes shall be 13/16" ○ for ¾" ○ bolts.

All fasteners shall be ¾" ○ high strength bolts.

Plan dimensions and details relative to existing plans are subject to nominal construction variations. The Contractor shall field verify existing dimensions and details affecting new construction and make necessary approved adjustments prior to construction or ordering of materials. Such variations shall not be cause for additional compensation for a change in scope of the work, however, the Contrator will be paid for the quantity actually furnished at the unit price bid for the work.

Existing structural steel that will be in contact with new structural steel shall be cleaned and painted prior to erection as required by the special provision "Cleaning and Painting Contact Surface Areas of Existing Steel Structures."

All new structural steel shall be hot-dip galvanized. See Special Provisions for "Hot Dip Galvanizing for Structural Steel."

Installation of new diaphragms shall not commence until all bolts for new web plates and clip angles are fully tightened.

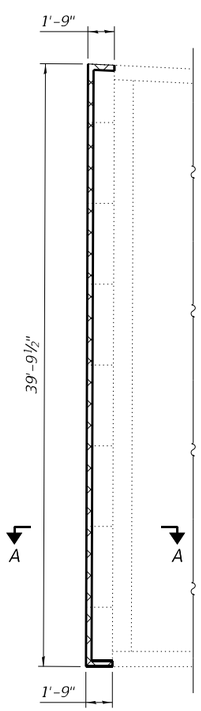

SUBSTRUCTURE REMOVAL PLAN

(North Abutment)

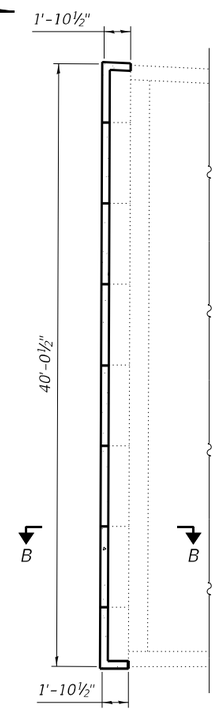

PROPOSED CONCRETE STRUCTURES PLAN

(North Abutment)

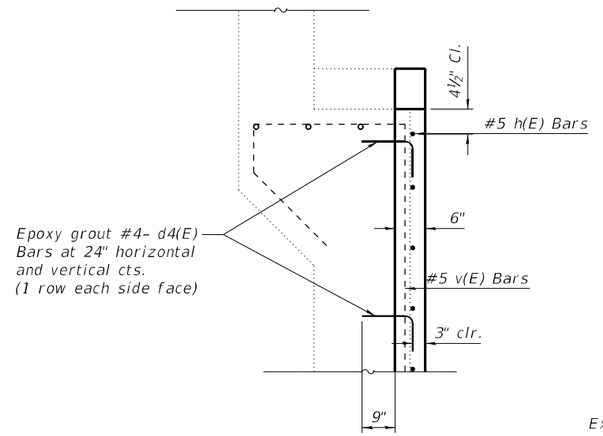

DETAIL A

Epoxy grout bars in 9" min. holes according to Article 584 of the Standard Specifications.

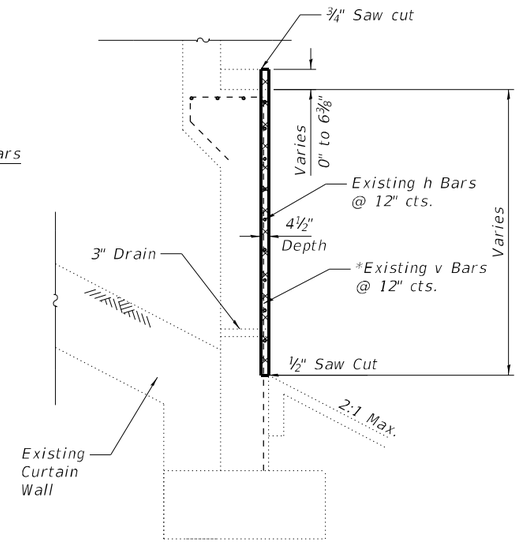

SECTION A-A

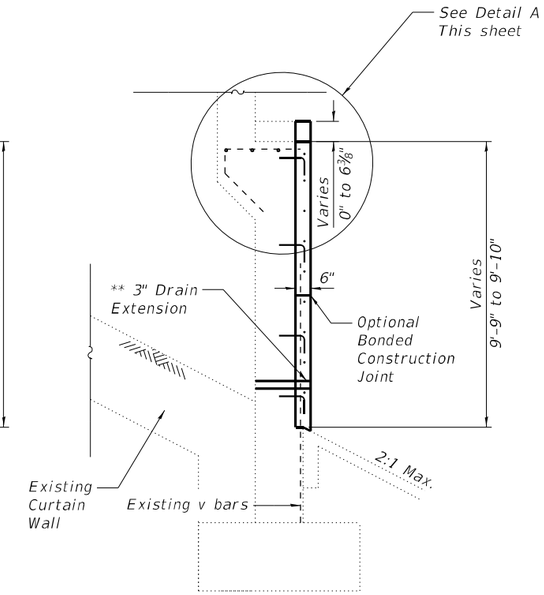

SECTION B-B

** Existing abutment drains shall be extended thru proposed abutment face with PVC. Estimated pipe length 2'-0" to extend thru the existing abutment face into the vaulted abutment, pipe drain cost included with Concrete Structures.

Concrete Removal

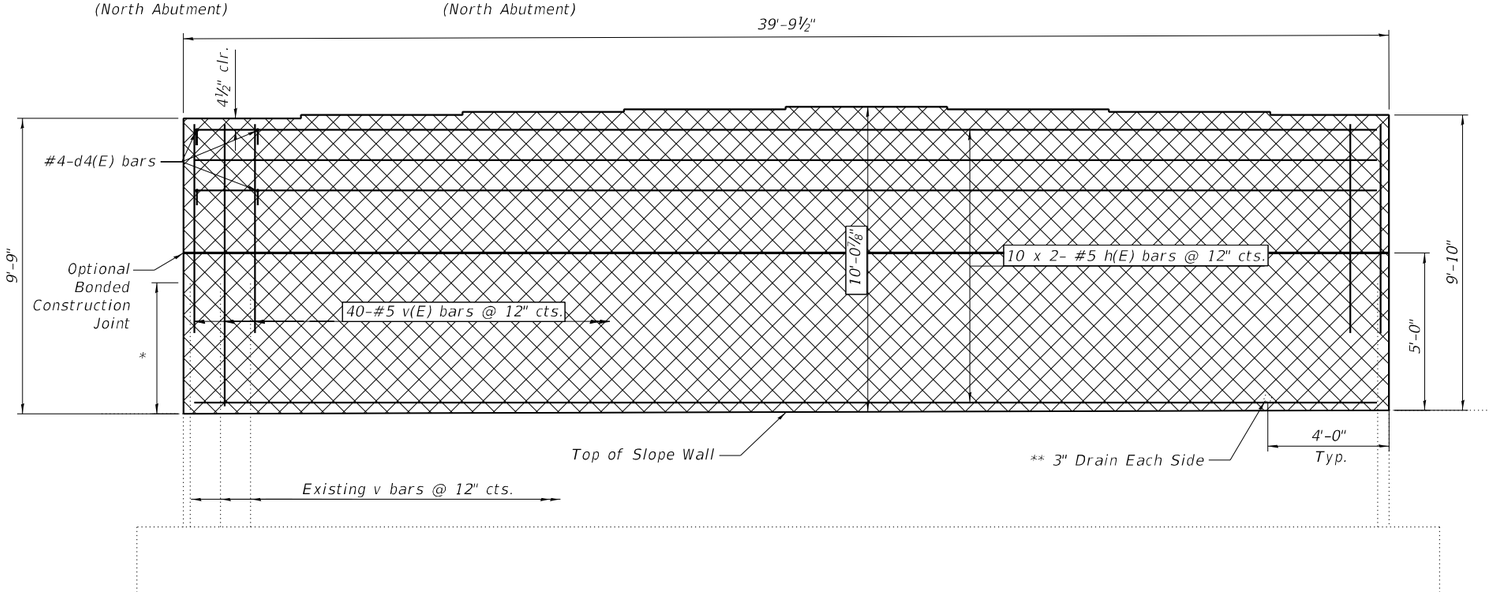

ELEVATION

* Cutoff height of existing v bars above concrete removal line is 4'-4".

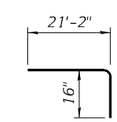

BAR h(E)

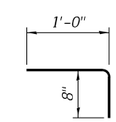

BAR d4(E)

Bar	Bar Size	Lap Length
h(E)	#5	2'-7"
v(E)	#5	2'-7"

BILL OF MATERIAL

(North Abutment)

Bar	No.	Size	Length	Shape
h(E)	20	#5	22'-6"	
d4(E)	110	#4	1'-8"	
v(E)	44	#5	8'-3"	
Reinforcement Bars, Epoxy Coated			Pound	970
Concrete Removal			Cu. Yd.	5.9
Concrete Structures			Cu. Yd.	7.8
Protective Coat			Sq. Yd.	51

NOTES:

Plan dimensions and details relative to existing plans are subject to nominal construction variations. The Contractor shall field verify existing dimensions and details affecting new construction and make necessary approved adjustments prior to construction or ordering of materials. Such variations shall not be cause for additional compensation for a change in scope of work, however, the contractor will be paid for the quantity actually furnished at the unit price bid for the work.

The cost of epoxy grouting bars shall be included with Reinforcement Bars, Epoxy Coated.

Reinforcement bars designated (E) shall be epoxy coated.

MODEL: North Abutment Details
FILE NAME: P:\Effingham\3454 - PTB 189 IDOT D5 VAV\Work Order #6\Cadd\Sheet\152 & 153\D570D64_0152_0153_Combined.dgn
12/6/2021 7:12:49 AM

CDI CIVIL DESIGN, INC. WBE / DBE EFFINGHAM, IL LICENSE #184.003222

USER NAME =	DESIGNED - KAS	REVISED -	
	CHECKED - TJZ	REVISED -	
PLOT SCALE =	DRAWN - DWS	REVISED -	
PLOT DATE =	CHECKED - KAS	REVISED -	

STATE OF ILLINOIS
DEPARTMENT OF TRANSPORTATION

NORTH ABUTMENT REPAIRS
S.N. 057-0152 (SB)

SHEET 20 OF 26 SHEETS

F.A.I. RTE.	SECTION	COUNTY	TOTAL SHEETS	SHEET NO.
55	(57-1,57-2)BDS	MCLEAN	88	40
		CONTRACT NO. 70D64		
		ILLINOIS FED. AID PROJECT		

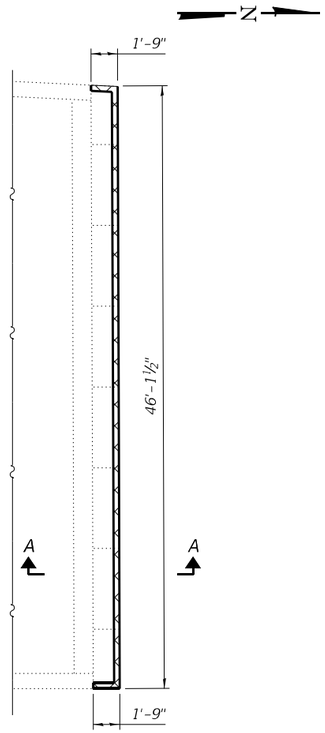

SUBSTRUCTURE REMOVAL PLAN

(South Abutment)

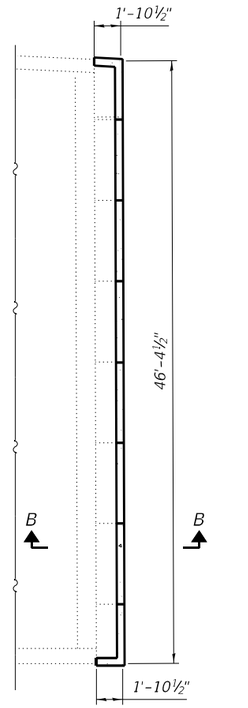

PROPOSED CONCRETE STRUCTURES PLAN

(South Abutment)

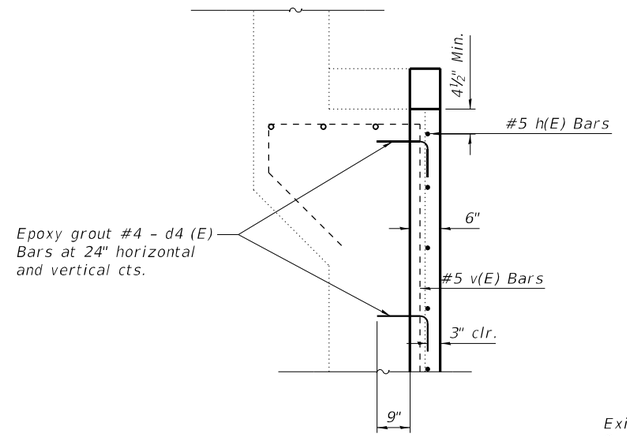

DETAIL A

Epoxy grout bars in 9" min. holes according to Article 584 of the Standard Specifications.

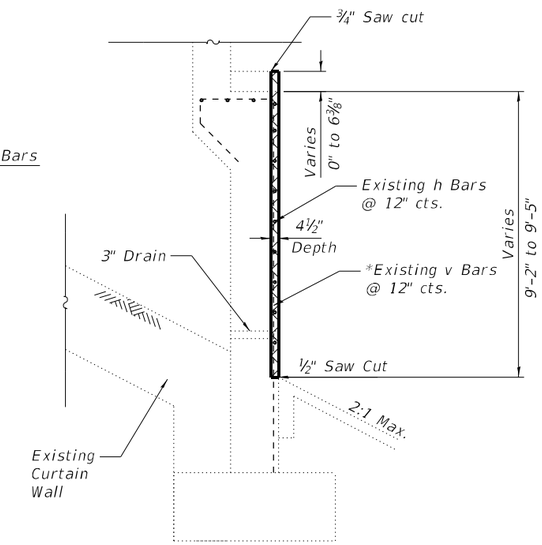

SECTION A-A

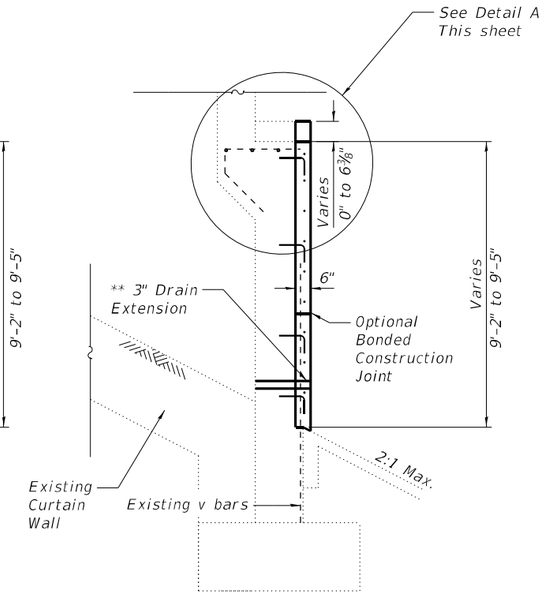

SECTION B-B

** Existing abutment drains shall be extended thru proposed abutment face with PVC. Estimated pipe length 2'-0" to extend thru the existing abutment face into the vaulted abutment, pipe drain cost included with Concrete Structures.

Concrete Removal

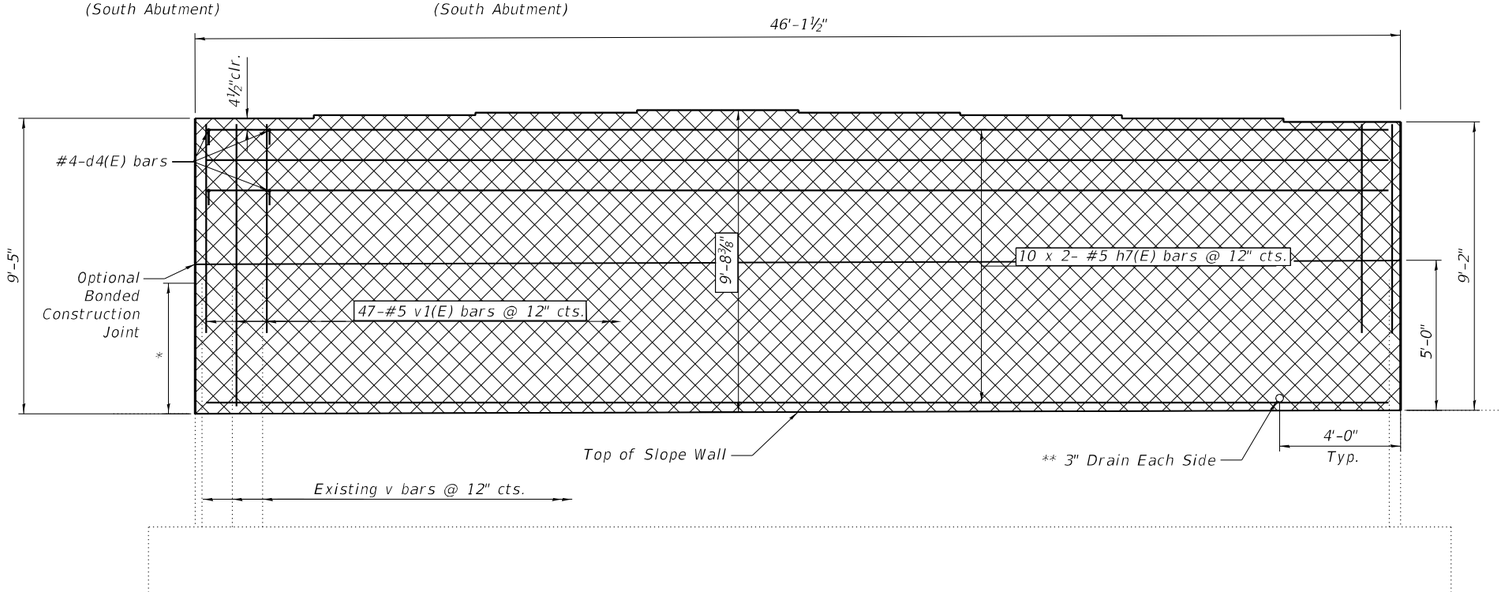

ELEVATION

* Cutoff height of existing v bars above concrete removal line is 4'-4".

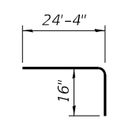

BAR h1(E)

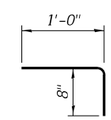

BAR d4(E)

Bar	Bar Size	Lap Length
h(E)	#5	2'-7"
v(E)	#5	2'-7"

BILL OF MATERIAL

(South Abutment)

Bar	No.	Size	Length	Shape
h1(E)	20	#5	25'-8"	
d4(E)	125	#4	1'-8"	
v1(E)	47	#5	8'-3"	
Reinforcement Bars, Epoxy Coated			Pound	1080
Concrete Removal			Cu. Yd.	6.4
Concrete Structures			Cu. Yd.	8.6
Protective Coat			Sq. Yd.	56

NOTES:

Plan dimensions and details relative to existing plans are subject to nominal construction variations. The Contractor shall field verify existing dimensions and details affecting new construction and make necessary approved adjustments prior to construction or ordering of materials. Such variations shall not be cause for additional compensation for a change in scope of work, however, the contractor will be paid for the quantity actually furnished at the unit price bid for the work.

The cost of epoxy grouting bars shall be included with Reinforcement Bars, Epoxy Coated.

Reinforcement bars designated (E) shall be epoxy coated.

MODEL: South Abutment Repairs
FILE NAME: P:\Effingham\3454 - PTB 189 IDOT D5 VA\Work Order #6\Cadd\Sheet\152 & 153\D70D64_0152_0153_Combined.dgn

CDI CIVIL DESIGN, INC. WBE / DBE EFFINGHAM, IL LICENSE #184.003222

USER NAME =	DESIGNED - KAS	REVISED -	
	CHECKED - TJZ	REVISED -	
PLOT SCALE =	DRAWN - DWS	REVISED -	
PLOT DATE =	CHECKED - KAS	REVISED -	

STATE OF ILLINOIS
DEPARTMENT OF TRANSPORTATION

SOUTH ABUTMENT REPAIRS
S.N. 057-0152 (SB)

SHEET 21 OF 26 SHEETS

F.A.I. RTE.	SECTION	COUNTY	TOTAL SHEETS	SHEET NO.
55	(57-1,57-2)BDS	MCLEAN	88	41

CONTRACT NO. 70D64

ILLINOIS FED. AID PROJECT

12/6/2021 7:12:50 AM

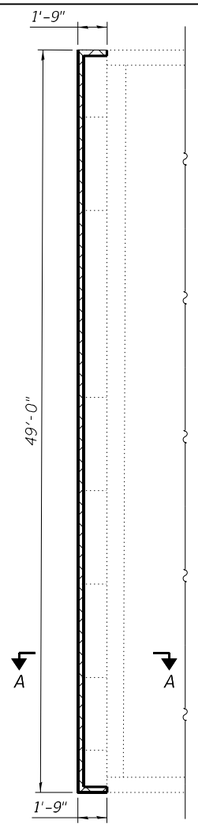

SUBSTRUCTURE REMOVAL PLAN

(North Abutment)

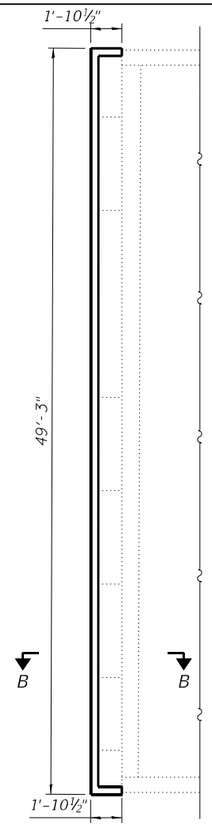

PROPOSED CONCRETE STRUCTURES PLAN

(North Abutment)

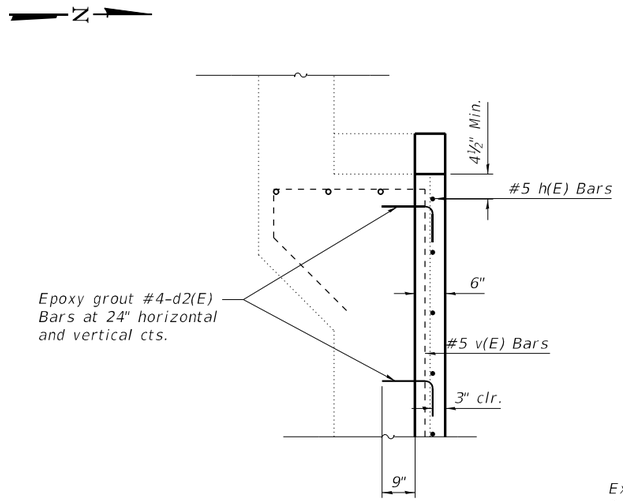

DETAIL A

Epoxy grout bars in 9" min. holes according to Article 584 of the Standard Specifications.

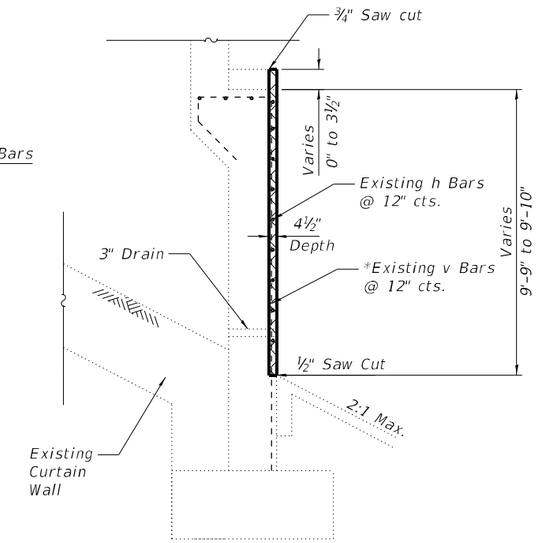

SECTION A-A

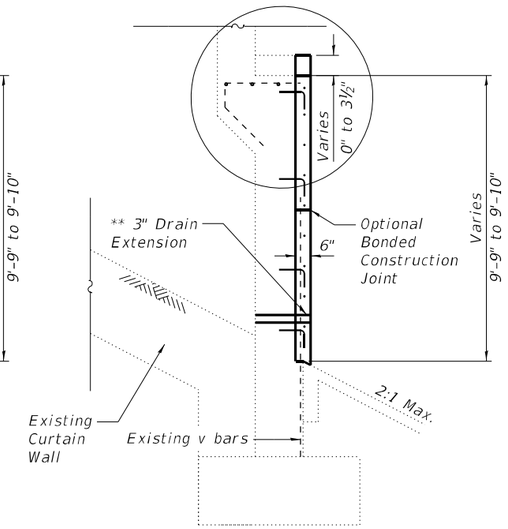

SECTION B-B

Bar	Bar Size	Lap Length
h(E)	#5	2'-7"
v(E)	#5	2'-7"

Concrete Removal

** Existing abutment drains shall be extended thru proposed abutment face with PVC. Estimated pipe length 2'-0" to extend thru the existing abutment face into the vaulted abutment, pipe drain cost included with Concrete Structures.

* Cutoff height of existing v bars above concrete removal line is 4'-4".

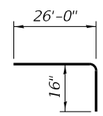

BAR h3(E)

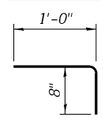

BAR d2(E)

BILL OF MATERIAL

(North Abutment)

Bar	No.	Size	Length	Shape
h3(E)	20	#5	27'-4"	
d2(E)	135	#4	1'-8"	
v(E)	53	#5	8'-3"	
Reinforcement Bars, Epoxy Coated			Pound	1180
Concrete Removal			Cu. Yd.	7.2
Concrete Structures			Cu. Yd.	9.7
Protective Coat			Sq. Yd.	62

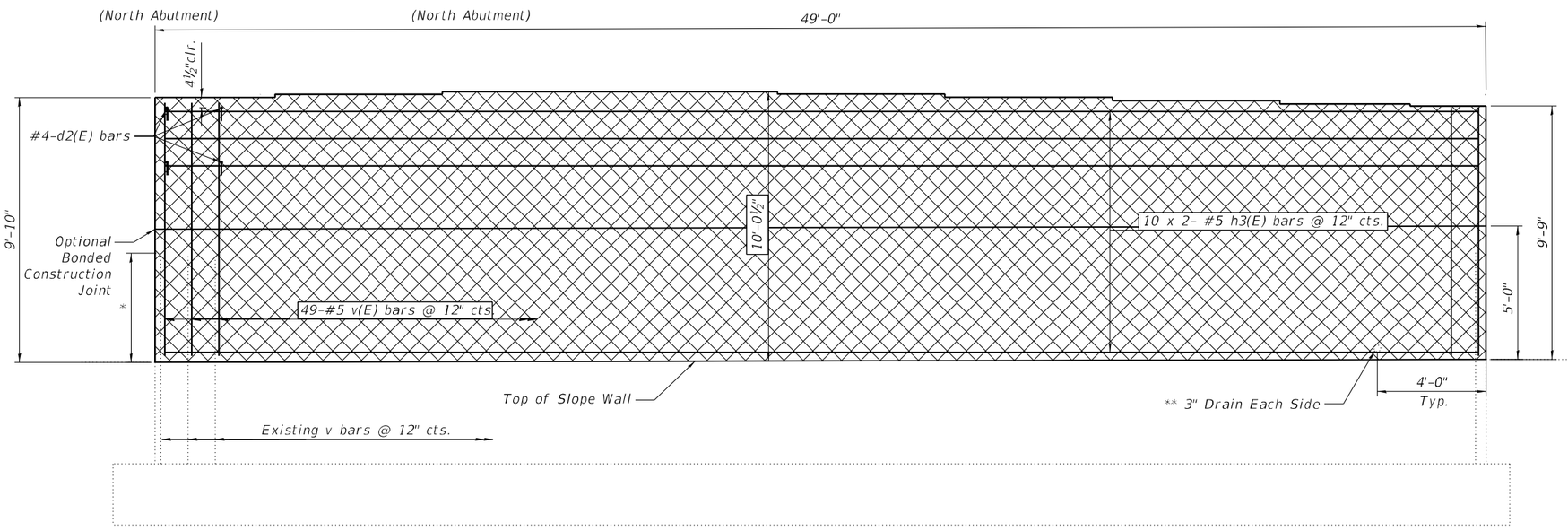

ELEVATION

NOTES:

Plan dimensions and details relative to existing plans are subject to nominal construction variations. The Contractor shall field verify existing dimensions and details affecting new construction and make necessary approved adjustments prior to construction or ordering of materials. Such variations shall not be cause for additional compensation for a change in scope of work, however, the contractor will be paid for the quantity actually furnished at the unit price bid for the work.

The cost of epoxy grouting bars shall be included with Reinforcement Bars, Epoxy Coated.

Reinforcement bars designated (E) shall be epoxy coated.

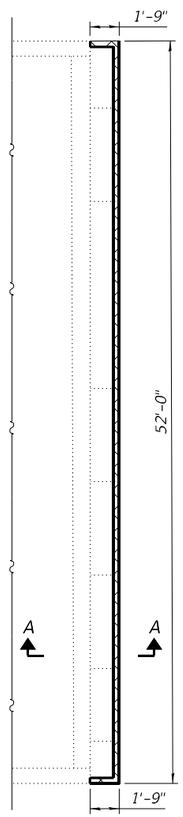

SUBSTRUCTURE REMOVAL PLAN

(South Abutment)

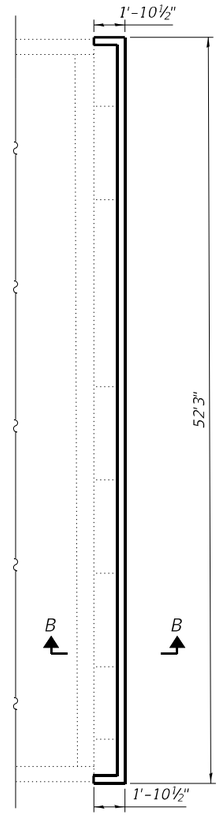

PROPOSED CONCRETE STRUCTURES PLAN

(South Abutment)

N

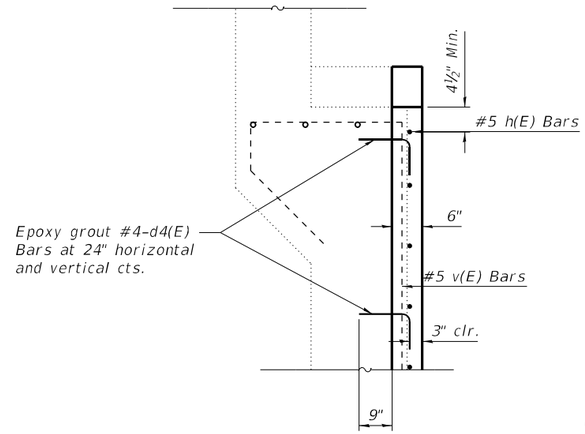

DETAIL A

Epoxy grout bars in 9" min. holes according to Article 584 of the Standard Specifications.

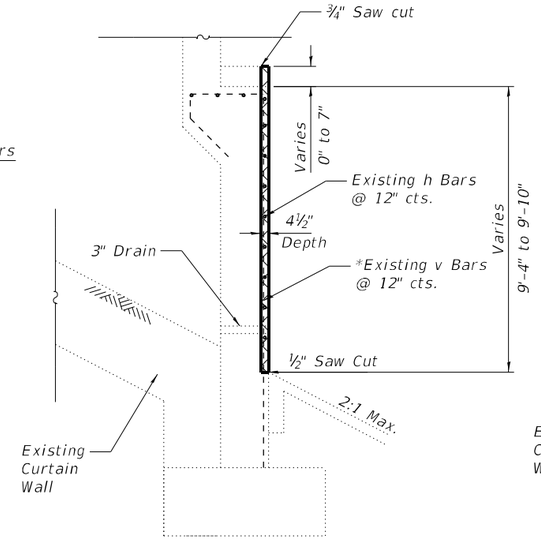

SECTION A-A

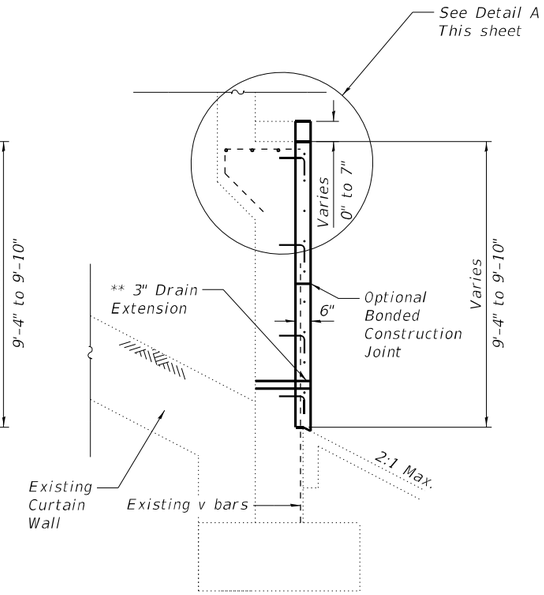

SECTION B-B

Bar	Bar Size	Lap Length
h(E)	#5	2'-7"
v(E)	#5	2'-7"

Concrete Removal

** Existing abutment drains shall be extended thru proposed abutment face with PVC. Estimated pipe length 2'-0" to extend thru the existing abutment face into the vaulted abutment, pipe drain cost included with Concrete Structures.

* Cutoff height of existing v bars above concrete removal line is 4'-4".

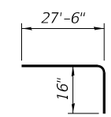

BAR h4(E)

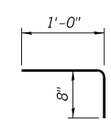

BAR d4(E)

BILL OF MATERIAL

(South Abutment)

Bar	No.	Size	Length	Shape
h4(E)	20	#5	28'-10"	
d4(E)	140	#4	1'-8"	
v2(E)	44	#5	8'-3"	
Reinforcement Bars, Epoxy Coated			Pound	1140
Concrete Removal			Cu. Yd.	7.3
Concrete Structures			Cu. Yd.	9.8
Protective Coat			Sq. Yd.	63

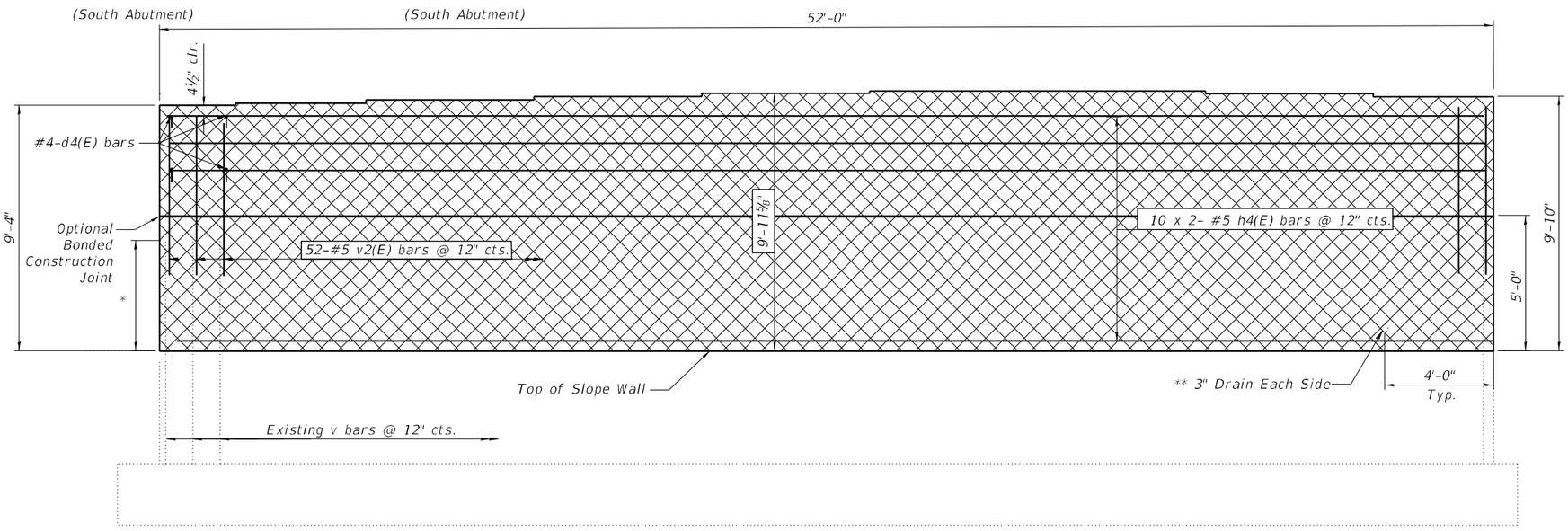

ELEVATION

NOTES:

Plan dimensions and details relative to existing plans are subject to nominal construction variations. The Contractor shall field verify existing dimensions and details affecting new construction and make necessary approved adjustments prior to construction or ordering of materials. Such variations shall not be cause for additional compensation for a change in scope of work, however, the contractor will be paid for the quantity actually furnished at the unit price bid for the work.

The cost of epoxy grouting bars shall be included with Reinforcement Bars, Epoxy Coated.

Reinforcement bars designated (E) shall be epoxy coated.

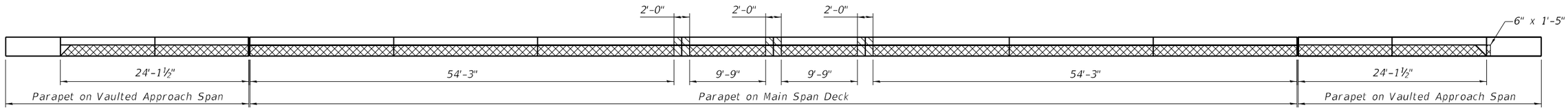

WEST PARAPET ELEVATION

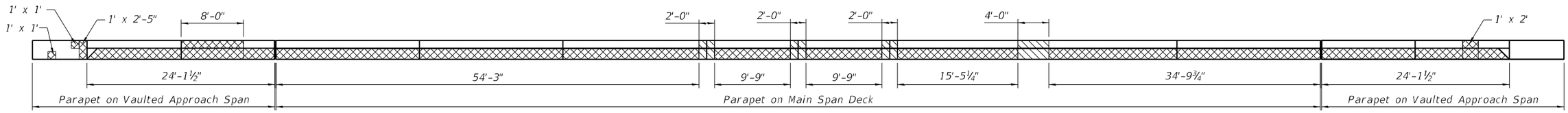

EAST PARAPET ELEVATION

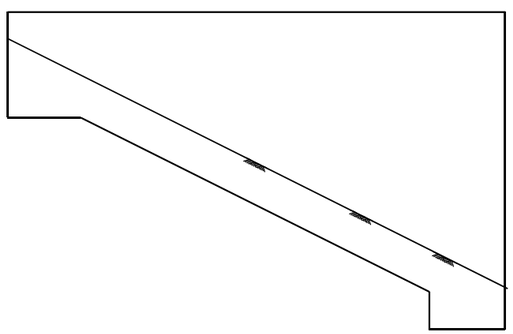

SOUTH ABUTMENT EAST CURTAIN WALL

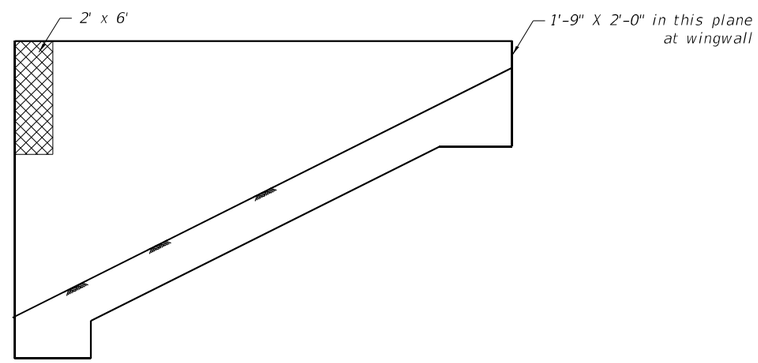

SOUTH ABUTMENT WEST CURTAIN WALL

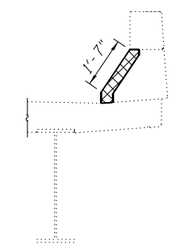

SECTION THRU PARAPET

Showing Typical Removal Limits
for Structural Repair of Concrete
on Parapets

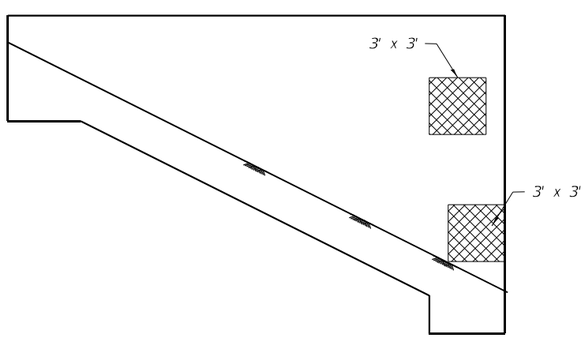

NORTH ABUTMENT WEST CURTAIN WALL

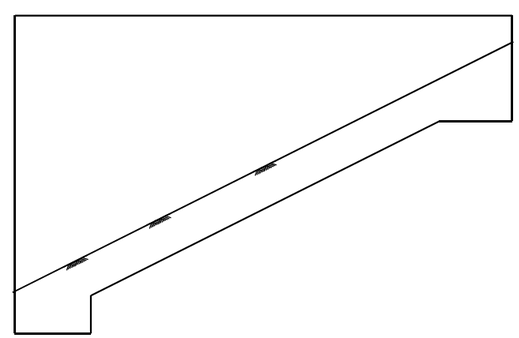

NORTH ABUTMENT EAST CURTAIN WALL

Structural Repair of Concrete
Depth equal to or Less than 5"

Parapet Replacement-See Parapet Repair Sheet, Sheet 11 of 26

Note:

See Special Provision for Structural Repair of Concrete.

BILL OF MATERIAL

Structure	Item	Unit	Total
057-0152	Structural Repair of Concrete, Depth Equal to or Less than 5"	Sq. Ft.	626

MODEL: Shallow Repairs
FILE NAME: P:\Effingham\3454 - PTB 189 IDOT D5 VA\Work Order #6\Cadd\Sheets\152 & 153\D570D64_0152_0153_Combined.dgn
10/21/2021 2:52:50 PM

CDI CIVIL DESIGN, INC. WBE / DBE EFFINGHAM, IL LICENSE #184.003222

USER NAME =	DESIGNED - KAS	REVISED -	
	CHECKED - TJZ	REVISED -	
PLOT SCALE =	DRAWN - DWS	REVISED -	
PLOT DATE =	CHECKED - KAS	REVISED -	

STATE OF ILLINOIS
DEPARTMENT OF TRANSPORTATION

SHALLOW CONCRETE REPAIR PLAN
S.N. 057-0152 (SB)

SHEET 24 OF 26 SHEETS

F.A.I. RTE.	SECTION	COUNTY	TOTAL SHEETS	SHEET NO.
55	(57-1,57-2)BDS	MCLEAN	88	44

CONTRACT NO. 70D64

ILLINOIS FED. AID PROJECT

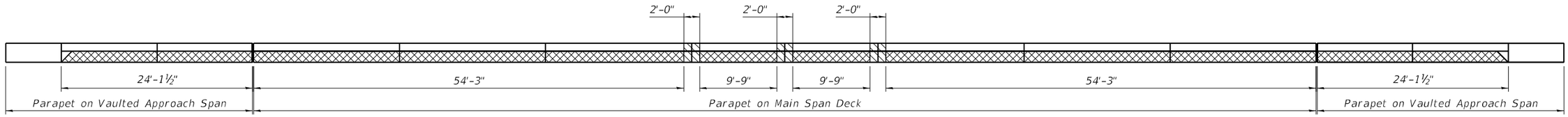

WEST PARAPET ELEVATION

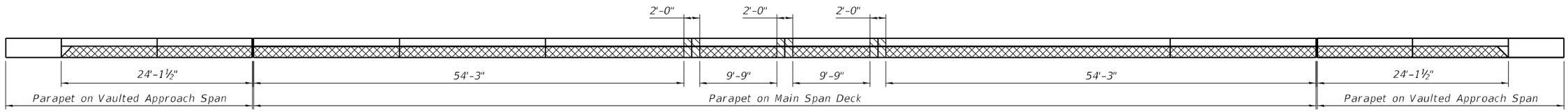

EAST PARAPET ELEVATION

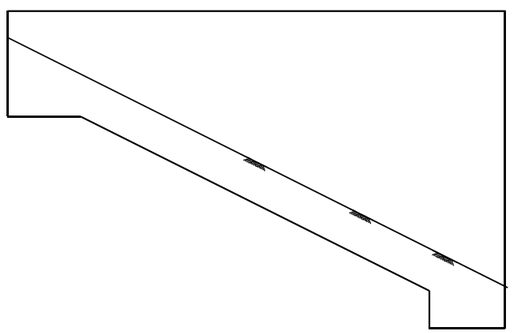

SOUTH ABUTMENT EAST CURTAIN WALL

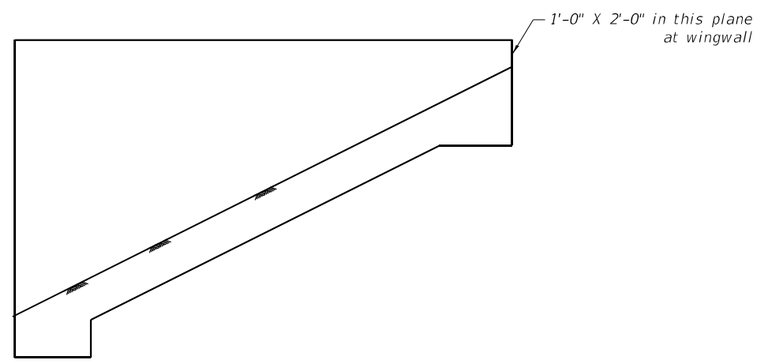

SOUTH ABUTMENT WEST CURTAIN WALL

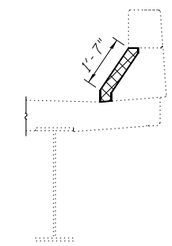

SECTION THRU PARAPET

Showing Typical Removal Limits
for Structural Repair of Concrete
on Parapets

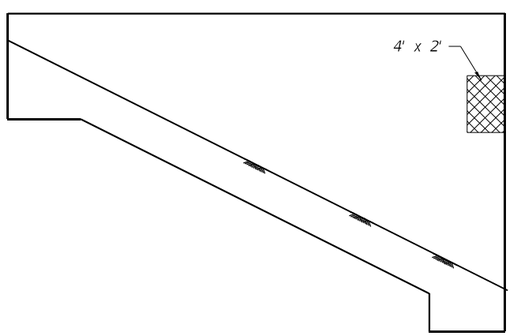

NORTH ABUTMENT WEST CURTAIN WALL

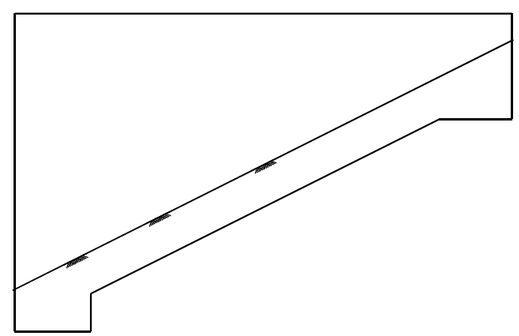

NORTH ABUTMENT EAST CURTAIN WALL

Structural Repair of Concrete
Depth equal to or Less than 5"

Parapet Replacement-See Parapet Repair Sheet, Sheet 11 of 26

Note:
See Special Provision for Structural Repair of Concrete.

BILL OF MATERIAL

Structure	Item	Unit	Total
057-0153	Structural Repair of Concrete, Depth Equal to or Less than 5"	Sq. Ft.	600

MODEL: Shallow Repair
FILE NAME: P:\Effingham\3454 - PTB 189 IDOT D5 V-V\Work Order #6\Cadd\Sheet\152 & 153\D570D64_0152_0153_Combined.dgn

CDI CIVIL DESIGN, INC. WBE / DBE
EFFINGHAM, IL
LICENSE #184.003222

USER NAME =	DESIGNED - KAS	REVISED -	
	CHECKED - TJZ	REVISED -	
PLOT SCALE =	DRAWN - DWS	REVISED -	
PLOT DATE =	CHECKED - KAS	REVISED -	

STATE OF ILLINOIS
DEPARTMENT OF TRANSPORTATION

SHALLOW CONCRETE REPAIR PLAN
S.N. 057-0153 (NB)

SHEET 25 OF 26 SHEETS

F.A.I. RTE.	SECTION	COUNTY	TOTAL SHEETS	SHEET NO.
55	(57-1,57-2)BDS	MCLEAN	88	45
		CONTRACT NO. 70D64		
		ILLINOIS	FED. AID PROJECT	

10/21/2021 2:52:51 PM

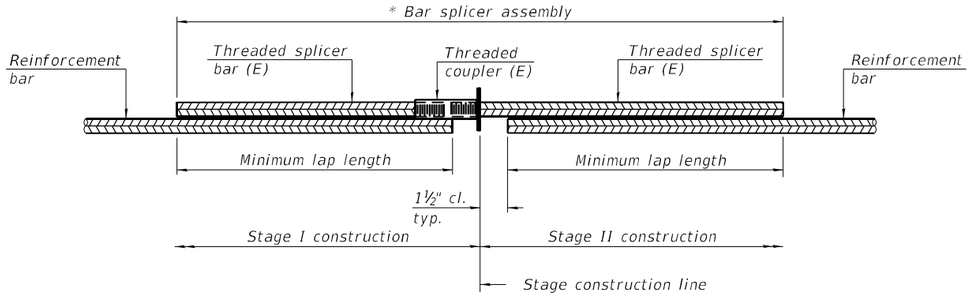

STANDARD BAR SPLICER ASSEMBLY PLAN

(All components shall be provided from one supplier)

Threaded splicer bar length = min. lap length + 1½" + thread length

* Epoxy not required on Bar Splicer Assembly components used in conjunction with black bars.

Structure	Location	Bar size	No. assemblies required	Minimum lap length
057-0152	Deck End	#6	52	4'-10"
057-0153	Deck End	#6	84	4'-10"

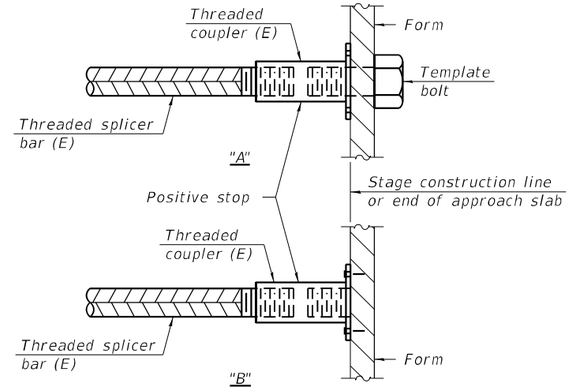

INSTALLATION AND SETTING METHODS

"A" : Set bar splicer assembly by means of a template bolt.
"B" : Set bar splicer assembly by nailing to wood forms or cementing to steel forms.
(E) : Indicates epoxy coating.

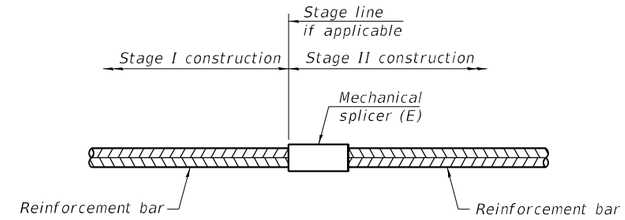

STANDARD MECHANICAL SPLICER

Location	Bar size	No. assemblies required

Notes:
Splicer bars shall be deformed with threaded ends and have a minimum 60 ksi yield strength.
All reinforcement shall be lapped and tied to the splicer bars.
Bar splicer assemblies shall be epoxy coated according to the requirements for reinforcement bars. See Section 508 of the Standard Specifications.
See approved list of bar splicer assemblies and mechanical splicers for alternatives.

BSD-1 1-1-2020

CDI CIVIL DESIGN, INC. WBE / DBE EFFINGHAM, IL LICENSE #184.003222

USER NAME =	DESIGNED - KAS	REVISED -	
	CHECKED - TJZ	REVISED -	
PLOT SCALE =	DRAWN - DWS	REVISED -	
PLOT DATE =	CHECKED - KAS	REVISED -	

STATE OF ILLINOIS
DEPARTMENT OF TRANSPORTATION

BAR SPLICER ASSEMBLY AND MECHANICAL SPLICER DETAILS
S.N. 057-0152 (SB) & S.N. 057-0153 (NB)

SHEET 26 OF 26 SHEETS

F.A.I. RTE.	SECTION	COUNTY	TOTAL SHEETS	SHEET NO.
55	(57-1,57-2)BDS	MCLEAN	88	46

CONTRACT NO. 70D64

ILLINOIS FED. AID PROJECT

MODEL: BSD
FILE NAME: P:\Effingham\3454 - PTB 189 IDOT D5 VA\Work Order #6\Cadd\Sheet\152 & 153\D570D64_0152_0153_Combined.dgn
11/29/2021 12:28:16 PM

Structure 057-0173 and Structure 057-0174 were originally constructed in 1975 as FAI 55 over Turkey Creek, Contract 30543, Section 57-2B at Station 781+50.00 in McLean County. In 2003, the structures were repaired with Contract 66107 Section (57-1, 57-2)RS. The channel was cleaned out, reshaped, and new rip rap was placed. The I-11 on S. N. 057-0173, bituminous overlay on S.N. 057-0174, and waterproofing membranes were removed and the deck was overlaid with 3" of microsilica concrete. Drains within 10' of piers and abutments were plugged. Gaps between slopewall and abutment were filled in with CLSM. On S.N. 057-0173 repairs were made to piers, abutments, and roadway face of the southwest parapet. On S.N. 057-0174 repairs were made to the southwest and southeast wingwalls and to the north pier. The approach slabs were replaced and a swellable waterproofing barrier was placed between the back of the abutment and the approach pavement on both structures.

The existing structures are three span reinforced concrete slab bridges. The superstructure consists of a nominal 14¼" reinforced concrete haunched slab deck with a 3" microsilica wearing surface. The superstructure is supported by two straight stem piers and two stub abutments on concrete piles. The slopes are protected with a concrete slopewall.

The structures have an overall length of 97'-0" from back to back of abutment. The deck has an out to out width of 42'-0", and a deck (clear area) width of 40'-0" from face to face of parapet and rail.

Note:
See Sheet 2 of 11 for Proposed Work, Bill of Material, and General Notes.

DESIGN STRESSES
FIELD UNITS

New Construction
f'c = 4,000 psi
fy = 60,000 psi

Existing Structure
fc = 1,400 psi
fs = 20,000 psi

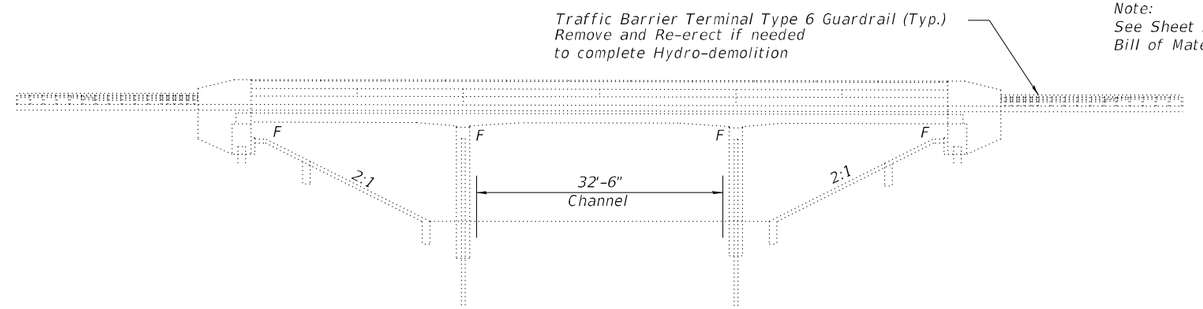

ELEVATION

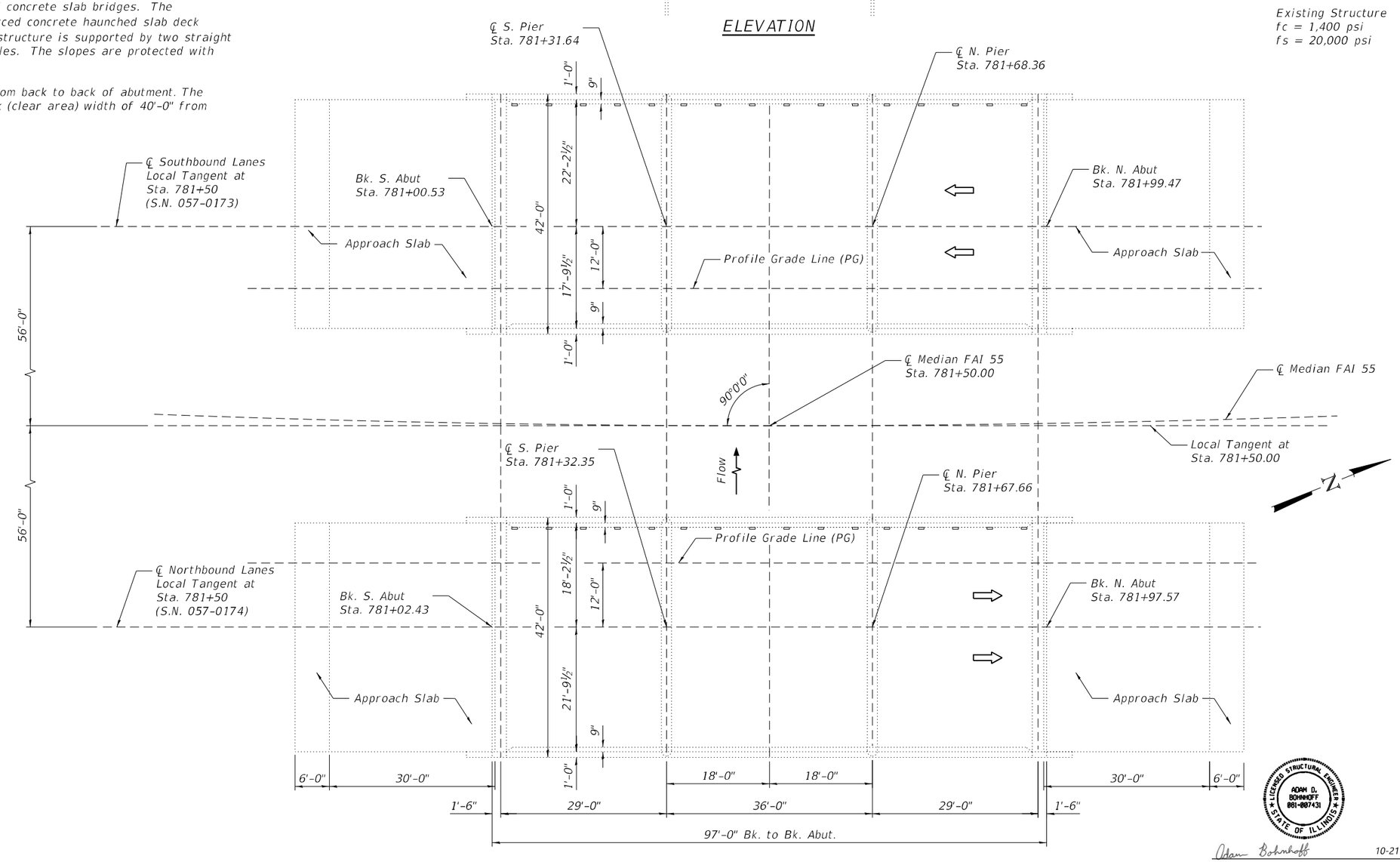

PLAN

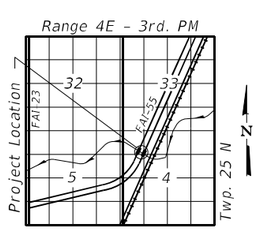

LOCATION SKETCH

ADAM D. BOHNHOFF 081-007431 LICENSED STRUCTURAL ENGINEER STATE OF ILLINOIS

Adam Bohnhoff 10-21-2021
Adam D. Bohnhoff Date
Licensed Structural Engineer
State of Illinois No. 081-007431
Expires 11-30-2022

MODEL: GPE
FILE NAME: P:\Effingham\3454 - PTB 189 IDOT D5 V4\Work Order #6\Cadd\Sheet\173 & 174\D570D64_0173_0174_Combined.dgn
10/21/2021 2:58:29 PM

CIVIL DESIGN, INC. WBE / DBE EFFINGHAM, IL LICENSE #184.003222	USER NAME =	DESIGNED - KAS	REVISED -	STATE OF ILLINOIS DEPARTMENT OF TRANSPORTATION	GENERAL PLAN AND ELEVATION S.N. 057-0173 (SB) & S.N. 057-0174 (NB)
		CHECKED - TJZ	REVISED -		
	PLOT SCALE =	DRAWN - DWS	REVISED -		
	PLOT DATE =	CHECKED - KAS	REVISED -		SHEET 1 OF 11 SHEETS

F.A.I. RTE.	SECTION	COUNTY	TOTAL SHEETS	SHEET NO.
55	(57-1,57-2)BDS	MCLEAN	88	47
		CONTRACT NO. 70D64		
	ILLINOIS	FED. AID PROJECT		

TOTAL BILL OF MATERIAL SN 057-0173 & SN 057-0174

Item	Unit	Total
Protective Coat	Sq. Yd.	1560
Floor Drains	Each	8
Polymer Modified Portland Cement Mortar	Sq. Ft.	562
Bridge Deck Grooving (Longitudinal)	Sq. Yd.	896
Bridge Deck Microsilica Concrete Overlay, 2¼"	Sq. Yd.	616
Bridge Deck Microsilica Concrete Overlay, 3¾"	Sq. Yd.	805
Bridge Deck Scarification, 2"	Sq. Yd.	616
Bridge Deck Scarification, 3½"	Sq. Yd.	805
Structural Repair of Concrete (Depth = or < 5 inches)	Sq. Ft.	60
Deck Slab Repair (Full Depth, Type I)	Sq. Yd.	8
Concrete Removal	Cu. Yd.	10.3
Concrete Superstructure	Cu. Yd.	10.3
Diamond Grinding (Bridge Section)	Sq. Yd.	1288
Preformed Joint Sealer, 1"	Foot	160

INDEX OF SHEETS

PROPOSED WORK

1. Perform Bridge Deck Scarification on Bridge Deck, Approach Slabs, and PCC Connectors.
2. Perform Polymer Modified Portland Cement Mortar Repairs.
3. Concrete Removal at North Abutment SN 057-0173
4. Concrete Superstructure at North Abutment SN 057-0173
5. Place New Floor Drains.
6. Perform Full-Depth Patching and Approach Slab Repairs.
7. Perform Substructure Repairs.
8. Replace Joints at Approach Ends.
9. Place Microsilica Concrete Overlay on Bridge Deck and Approach Slabs.
10. Perform Diamond Grinding
11. Perform Longitudinal Deck Grooving
12. Apply Protective Coat

GENERAL NOTES

Plan dimensions and details relative to the existing structure have been taken from existing plans and are subject to nominal construction variations. It shall be the Contractor's responsibility to verify such dimensions and details in the field and make the necessary approved adjustments prior to construction or ordering of materials. Such variations shall not be cause for additional compensation for a change in the scope of work. However, the Contractor will be paid for the quantity actually furnished at the unit price for the work.

Reinforcement bars designated (E) shall be epoxy coated.

Prior to pouring the new concrete deck, all heavy or loose rust, loose mill scale, and other loose or potentially detrimental foreign material shall be removed from the surfaces in contact with concrete. Tightly adhered paint may remain unless otherwise noted. Removal shall be accomplished by methods that will not damage the steel and the cost will be included in the pay item covering removal of the existing concrete.

Joint openings shall be adjusted according to Article 520.04 of the Std. Specs. when the deck is poured at an ambient temperature other than 50°F.

Up to 1/4" may be ground off the bridge deck and bridge approach slabs through Diamond Grinding.

Expansion joints shall be fabricated and installed according to the manufacturer's recommendations and as approved by the Engineer. Expansion joints shall be fabricated to conform to the existing cross slopes of the bridge.

Protective Coat shall be applied from end to end of approaches to entire deck surface and along the vertical faces of the parapets.

Synthetic fibers shall be included in the bridge deck concrete overlay specified. See Special Provisions.

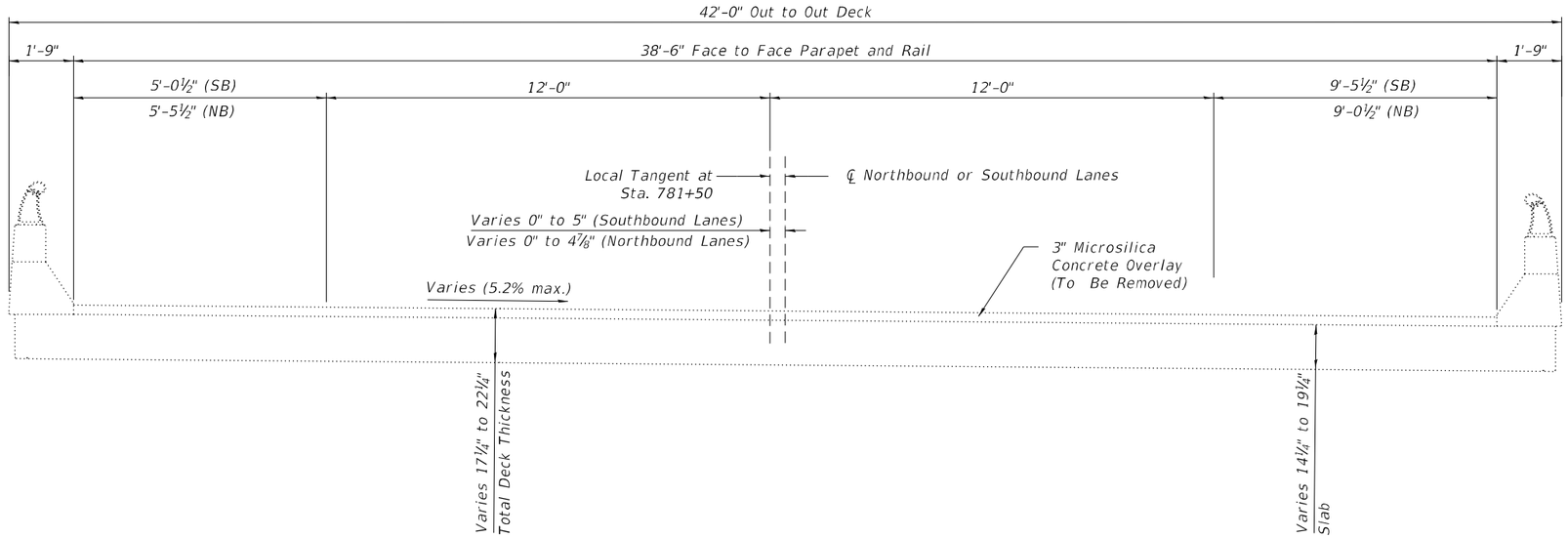

EXISTING CROSS SECTION

S.N. 057-0173 (SB) Looking South Shown
S.N. 057-0174 (NB) Looking North Similar but Opposite Superelevation

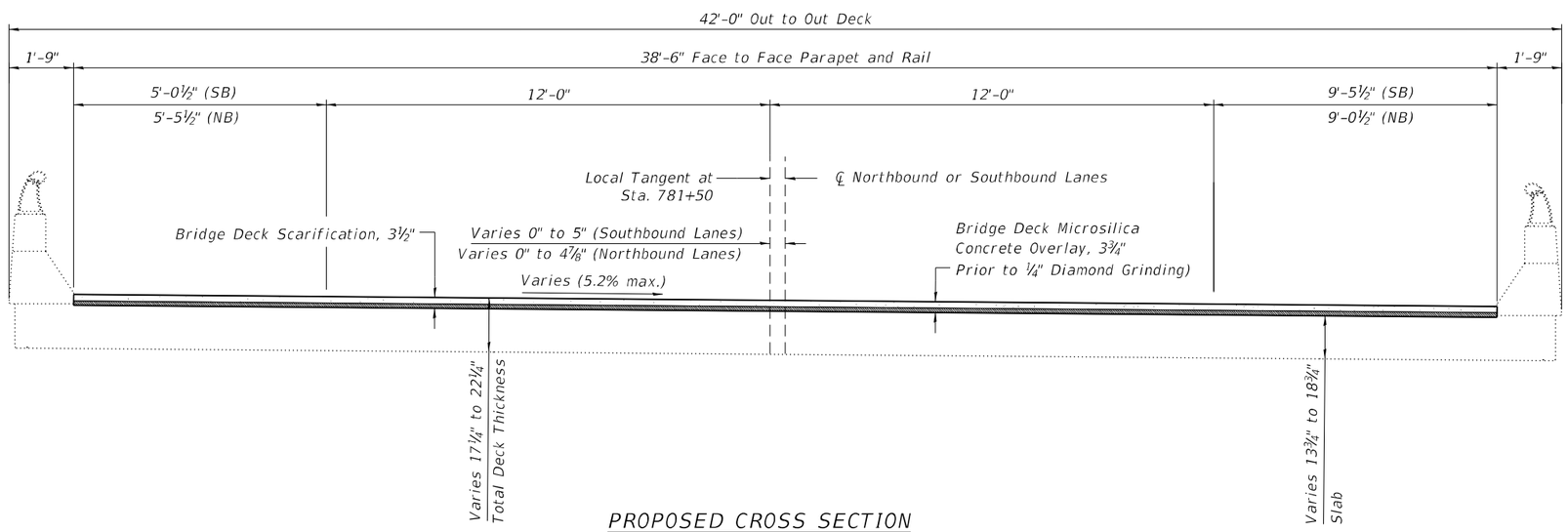

PROPOSED CROSS SECTION

S.N. 057-0173 (SB) Looking South Shown
S.N. 057-0174 (NB) Looking North Similar but Opposite Superelevation

MODEL: Cross Section
FILE NAME: P:\Effingham\3454 - PTB 189 IDOT D5 VA\Work Order #6\Cadd\Sheet\173 & 174\D570D64_0173_0174_Combined.dgn

CDI CIVIL DESIGN, INC. WBE / DBE EFFINGHAM, IL LICENSE #184.003222

USER NAME =	DESIGNED - KAS	REVISED -	
	CHECKED - TJZ	REVISED -	
PLOT SCALE =	DRAWN - DWS	REVISED -	
PLOT DATE =	CHECKED - KAS	REVISED -	

STATE OF ILLINOIS
DEPARTMENT OF TRANSPORTATION

EXISTING AND PROPOSED TYPICAL CROSS SECTIONS
S.N. 057-0173 (SB) & S.N. 057-0174 (NB)

SHEET 3 OF 11 SHEETS

F.A.I. RTE.	SECTION	COUNTY	TOTAL SHEETS	SHEET NO.
55	(57-1,57-2)BDS	MCLEAN	88	49
		CONTRACT NO. 70D64		
		ILLINOIS	FED. AID PROJECT	

11/29/2021 12:42:48 PM

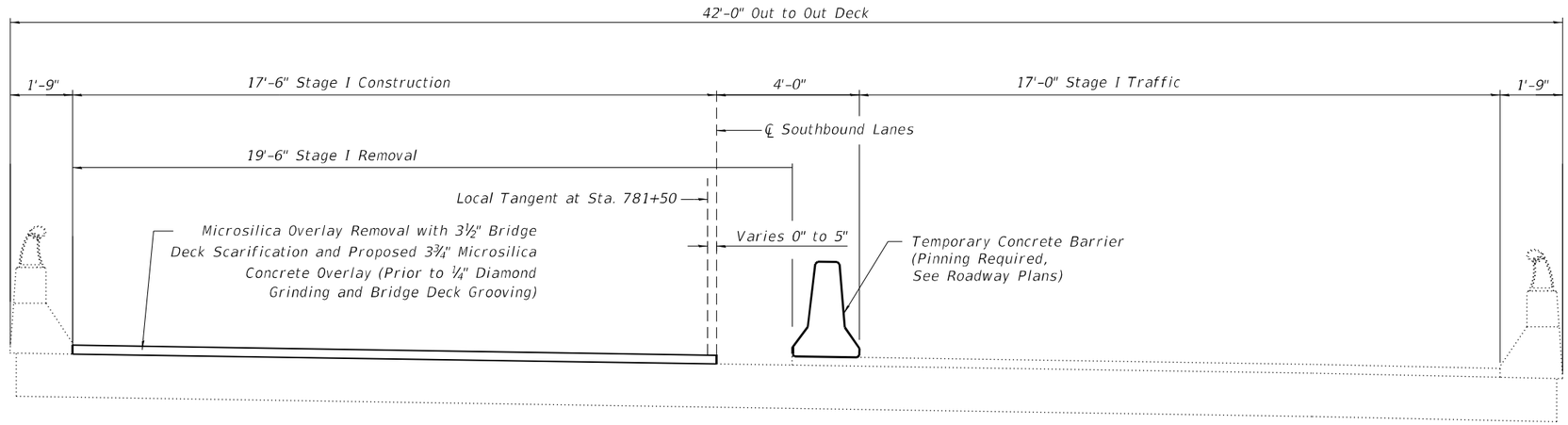

STAGE I CONSTRUCTION DETAIL

(Looking South)

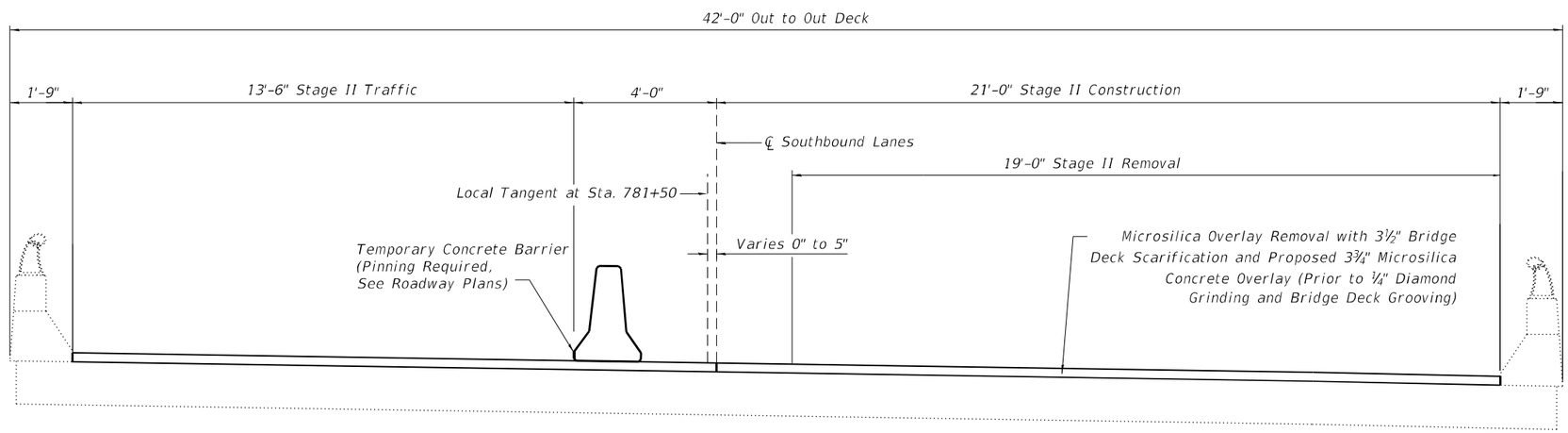

STAGE II CONSTRUCTION DETAIL

(Looking South)

MODEL: Stage Construction 0173
FILE NAME: P:\Effingham\3454 - PTB 189 IDOT D5 VA\Work Order #6\Cadd\Sheet\173 & 174\D570D64_0173_0174_Combined.dgn

CDI CIVIL DESIGN, INC. WBE / DBE EFFINGHAM, IL LICENSE #184.003222	USER NAME =	DESIGNED - KAS	REVISED -	STATE OF ILLINOIS DEPARTMENT OF TRANSPORTATION	STAGE CONSTRUCTION DETAILS S.N. 057-0173 (SB)	F.A.I. RTE.	SECTION	COUNTY	TOTAL SHEETS / SHEET NO.
		CHECKED - TJZ	REVISED -			55	(57-1,57-2)BDS	MCLEAN	88 / 50
	PLOT SCALE =	DRAWN - DWS	REVISED -					CONTRACT NO. 70D64	
	PLOT DATE =	CHECKED - KAS	REVISED -		SHEET 4 OF 11 SHEETS			ILLINOIS FED. AID PROJECT	

10/21/2021 2:58:34 PM

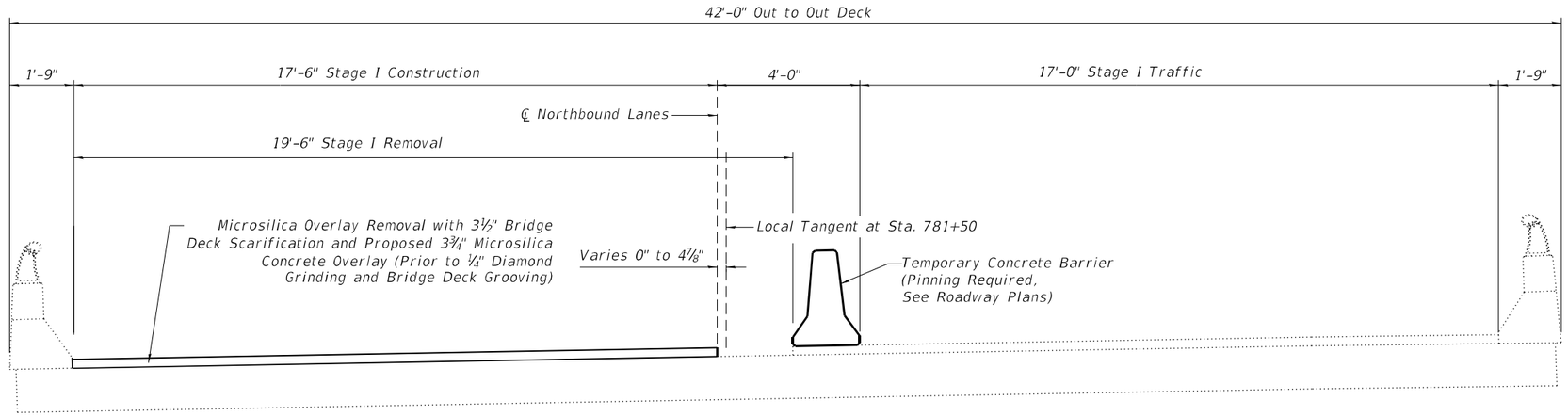

STAGE I CONSTRUCTION DETAIL

(Looking North)

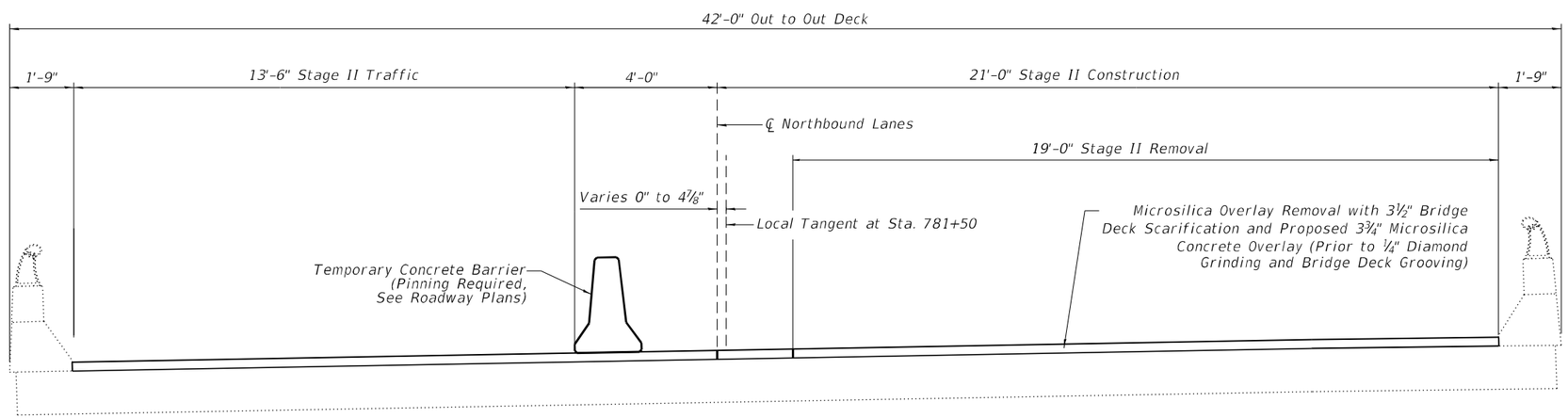

STAGE II CONSTRUCTION DETAIL

(Looking North)

MODEL: Stage Construction 0174
FILE NAME: P:\Effingham\3454 - PTB 189 IDOT D5 VA\Work Order #6\Cadd\Sheet\173 & 174\D570D64_0173_0174_Combined.dgn

CIVIL DESIGN, INC.
WBE / DBE
EFFINGHAM, IL
LICENSE #184.003222

USER NAME =	DESIGNED - KAS	REVISED -	
	CHECKED - TJZ	REVISED -	
PLOT SCALE =	DRAWN - DWS	REVISED -	
PLOT DATE =	CHECKED - KAS	REVISED -	

STATE OF ILLINOIS
DEPARTMENT OF TRANSPORTATION

STAGE CONSTRUCTION DETAILS
S.N. 057-0174 (NB)

SHEET 5 OF 11 SHEETS

F.A.I. RTE.	SECTION	COUNTY	TOTAL SHEETS	SHEET NO.
55	(57-1,57-2)BDS	MCLEAN	88	51
		CONTRACT NO. 70D64		
		ILLINOIS	FED. AID PROJECT	

10/21/2021 2:58:34 PM

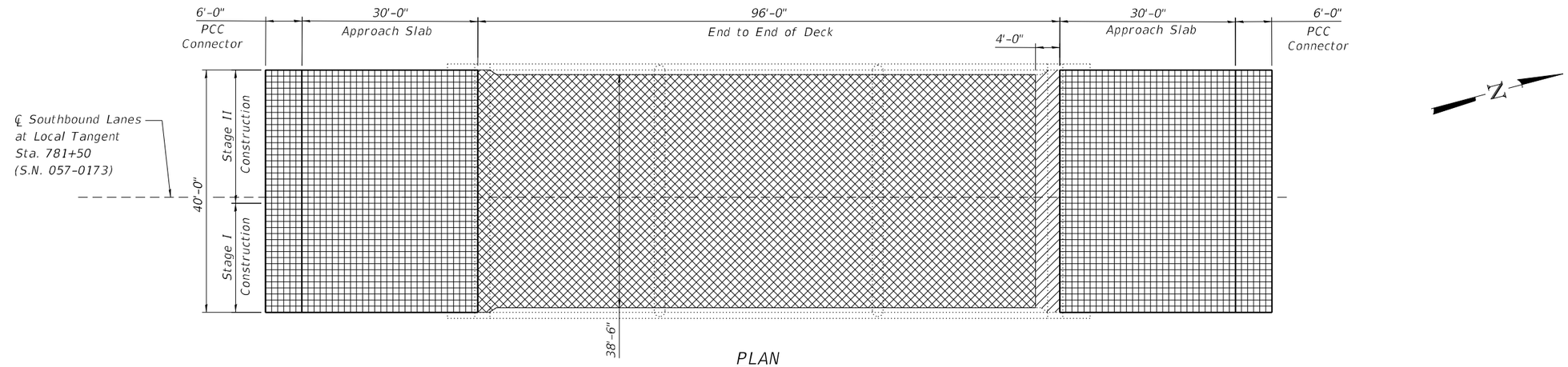

PLAN
(S.N. 057-0173)

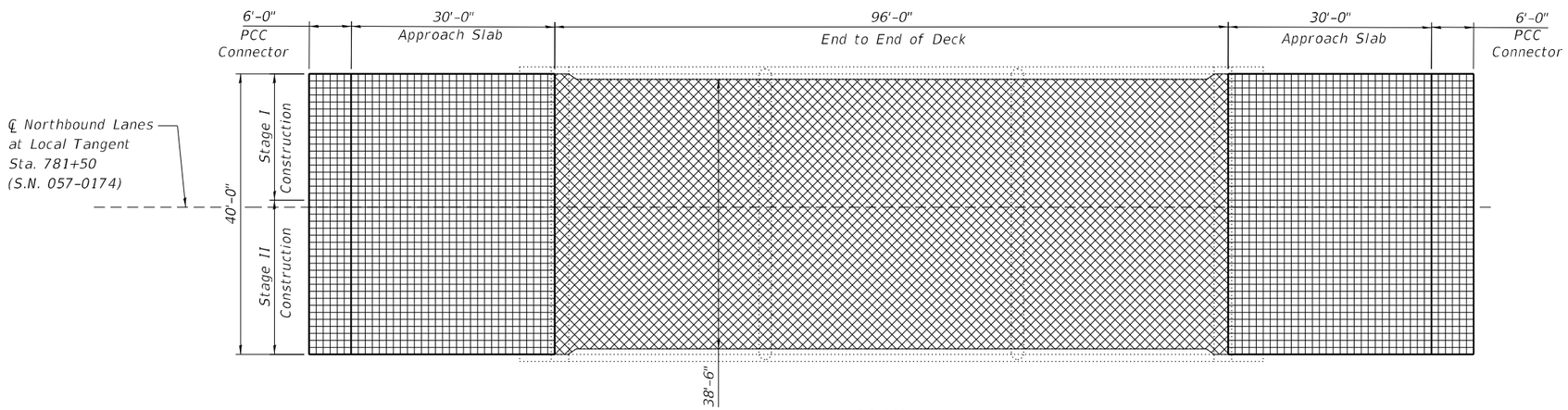

PLAN
(S.N. 057-0174)

Diamond Grinding, ¼" and Bridge Deck Grooving (Longitudinal)
(Area of Full Depth Removal at Deck End North Abutment SN 057-0173)

Bridge Deck Scarification, 2", Bridge Deck Microsilica Concrete Overlay, 2¼",
Diamond Grinding, ¼" and Bridge Deck Grooving (Longitudinal)

Bridge Deck Scarification, 3½", Bridge Microsilica Concrete Overlay, 3¾",
Diamond Grinding, ¼" and Bridge Deck Grooving (Longitudinal)

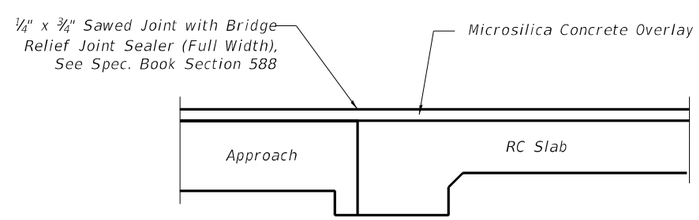

TYPICAL JOINT DETAIL AT ALL DECK ENDS

Note:
Cost of Sawed Joint and Bridge Relief Joint Sealer
included with Bridge Deck Microsilica Concrete Overlay, 2¼"

BILL OF MATERIAL
(Deck & Approach)

Structure	Item	Unit	Total
057-0173	Bridge Deck Microsilica Concrete Overlay, 3¾"	Sq. Yd.	394
	Bridge Deck Microsilica Concrete Overlay, 2¼"	Sq. Yd.	308
	Bridge Deck Scarification, 3½"	Sq. Yd.	394
	Bridge Deck Scarification, 2"	Sq. Yd.	308
	Bridge Deck Grooving (Longitudinal)	Sq. Yd.	448
	Diamond Grinding (Bridge Section)	Sq. Yd.	644
057-0174	Bridge Deck Microsilica Concrete Overlay, 3¾"	Sq. Yd.	411
	Bridge Deck Microsilica Concrete Overlay, 2¼"	Sq. Yd.	308
	Bridge Deck Scarification, 3½"	Sq. Yd.	411
	Bridge Deck Scarification, 2"	Sq. Yd.	308
	Bridge Deck Grooving (Longitudinal)	Sq. Yd.	448
	Diamond Grinding (Bridge Section)	Sq. Yd.	644

MODEL: Wearing Surface
FILE NAME: P:\Effingham\3454 - PTB 189 IDOT D5 V-V\Work Order #6\Cadd\Sheet\173 & 174\D570D64_0173_0174_Combined.dgn

CIVIL DESIGN, INC.
WBE / DBE
EFFINGHAM, IL
LICENSE #184.003222

USER NAME =	DESIGNED - KAS	REVISED -	
	CHECKED - TJZ	REVISED -	
PLOT SCALE =	DRAWN - DWS	REVISED -	
PLOT DATE =	CHECKED - KAS	REVISED -	

STATE OF ILLINOIS
DEPARTMENT OF TRANSPORTATION

WEARING SURFACE PLAN
S.N. 057-0173 (SB) & S.N. 057-0174 (NB)
SHEET 6 OF 11 SHEETS

F.A.I. RTE.	SECTION	COUNTY	TOTAL SHEETS	SHEET NO.
55	(57-1,57-2)BDS	MCLEAN	88	52
		CONTRACT NO. 70D64		
		ILLINOIS FED. AID PROJECT		

10/21/2021 2:58:34 PM

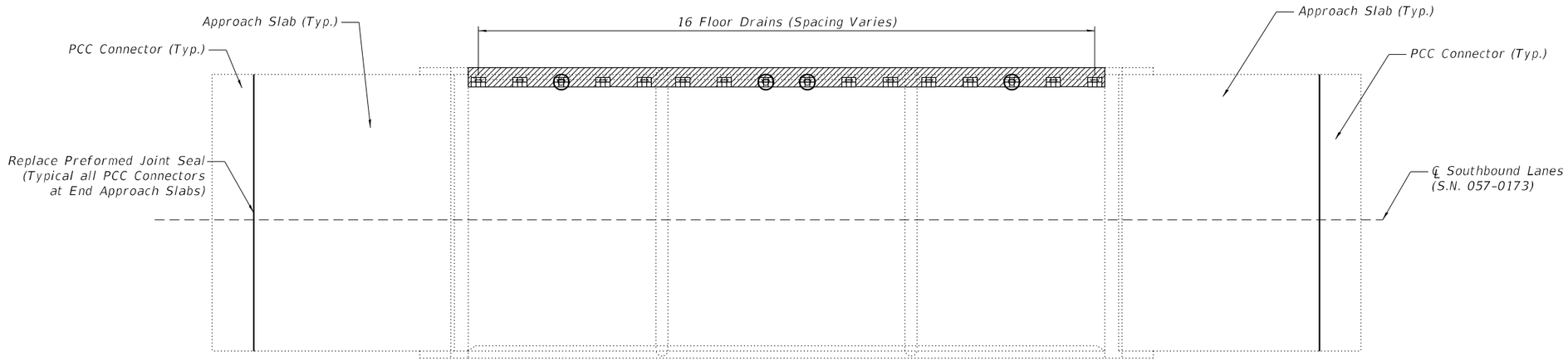

PLAN

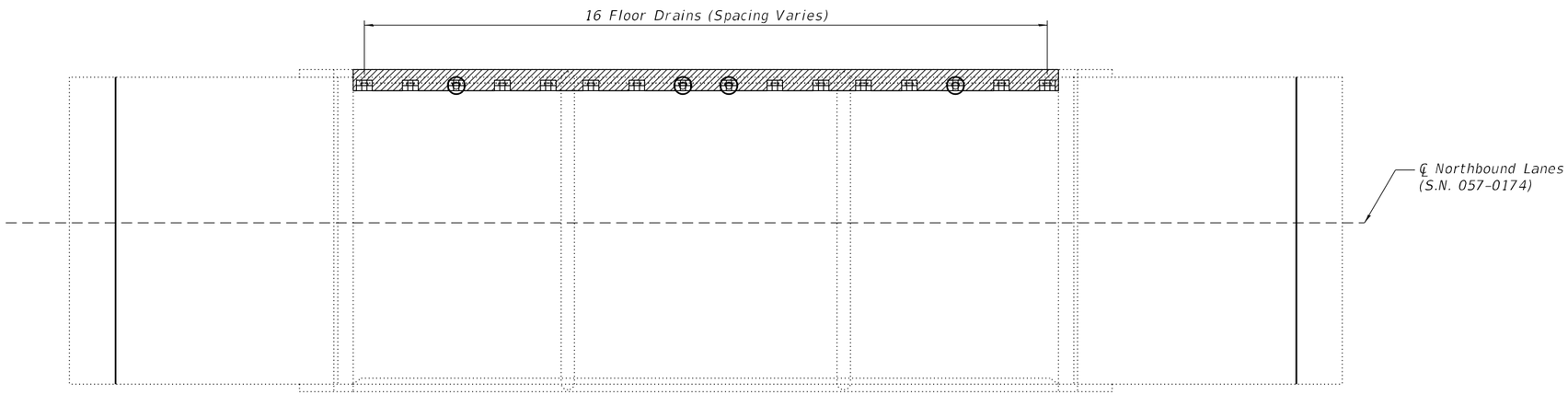

PLAN

LEGEND

- Proposed floor drain location
- Deck Slab Repair (Full Depth, Type I) at all Drain Locations. All repair areas are 2'-0" x 1'-1", unless otherwise noted.
- Polymer Modified Portland Cement Mortar

NOTES:

Patch sizes shown represent conditions at the time the plans were completed.

The actual sizes and locations of patching shall be determined by the Resident Engineer after removal of the wearing surface, before deck patching operations begin. The Engineer shall show the actual locations of the deck repairs on As-Built plans.

The existing drains and extensions shall be removed. Cost included with Deck Slab Repair (Full Depth, Type I).

BILL OF MATERIAL

Structure	Item	Unit	Total
057-0173	Deck Slab Repair (Full Depth, Type I)	Sq. Yd.	4
057-0173	Polymer Modified Portland Cement Mortar	Sq. Ft.	281
057-0173	Preformed Joint Seal, 2 3/4"	Foot	80
057-0174	Deck Slab Repair (Full Depth, Type I)	Sq. Yd.	4
057-0174	Polymer Modified Portland Cement Mortar	Sq. Ft.	281
057-0174	Preformed Joint Seal, 2 3/4"	Foot	80

MODEL: Patching
FILE NAME: P:\Effingham\3454 - PTB 189 IDOT D5 V-V\Work Order #6\Cadd\Sheet\173 & 174\D570D64_0173_0174_Combined.dgn

CIVIL DESIGN, INC.
WBE / DBE
EFFINGHAM, IL
LICENSE #184.003222

USER NAME =	DESIGNED - KAS	REVISED -	
	CHECKED - TJZ	REVISED -	
PLOT SCALE =	DRAWN - DWS	REVISED -	
PLOT DATE =	CHECKED - KAS	REVISED -	

STATE OF ILLINOIS
DEPARTMENT OF TRANSPORTATION

FLOOR DRAIN AND PATCHING DETAILS
S.N. 057-0173 (SB) & S.N. 057-0174 (NB)

SHEET 7 OF 11 SHEETS

F.A.I. RTE.	SECTION	COUNTY	TOTAL SHEETS	SHEET NO.
55	(57-1,57-2)BDS	MCLEAN	88	53

CONTRACT NO. 70D64

ILLINOIS FED. AID PROJECT

10/21/2021 2:58:35 PM

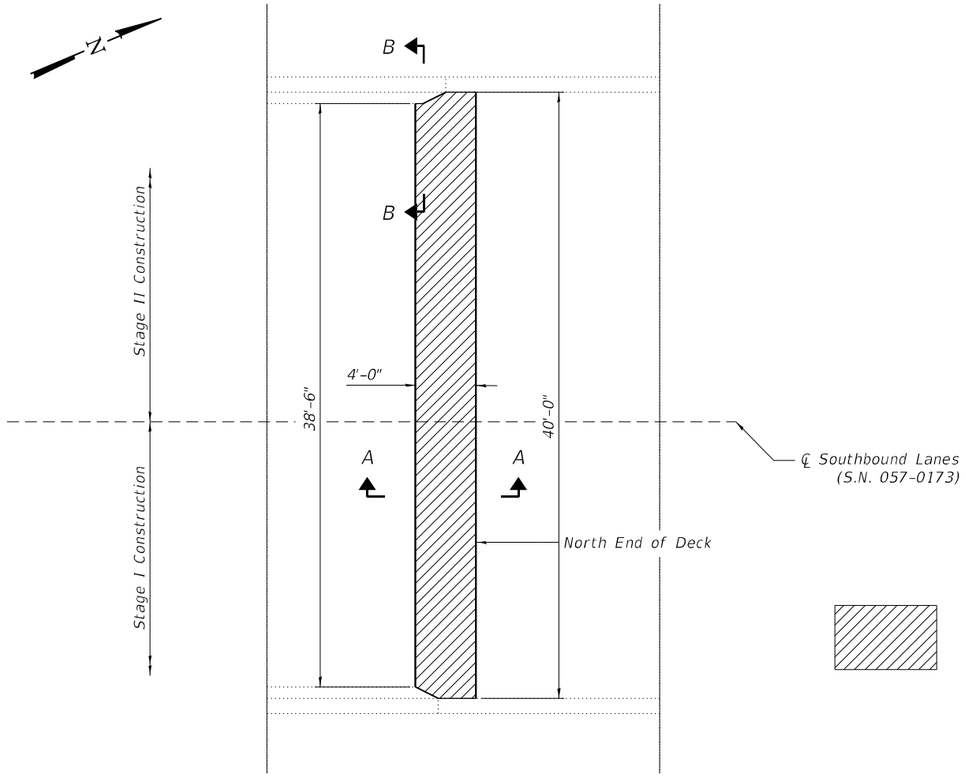

PLAN

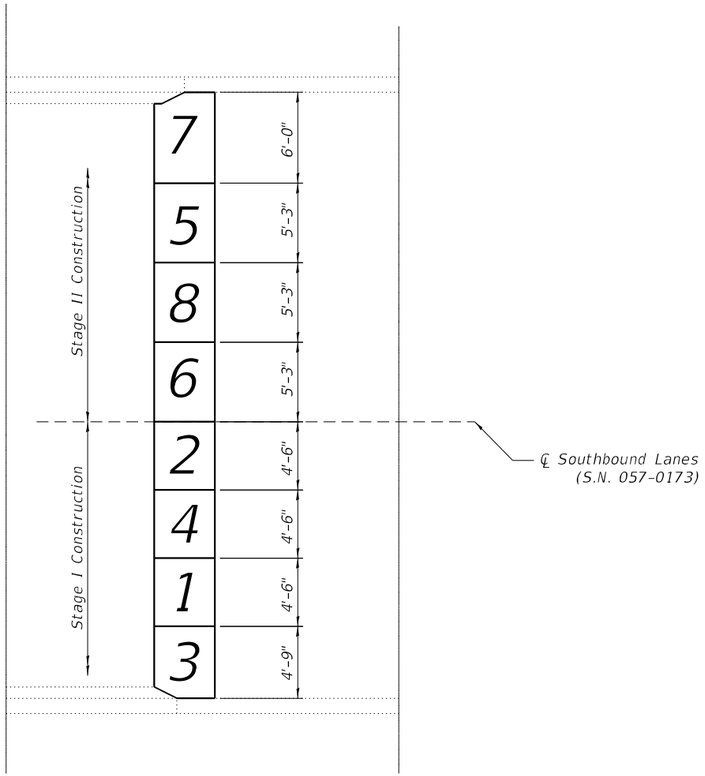

DECK REPAIR SEQUENCE

Remove and replace sections in the following order:
1 & 2 before 3 & 4
5 & 6 before 7 & 8

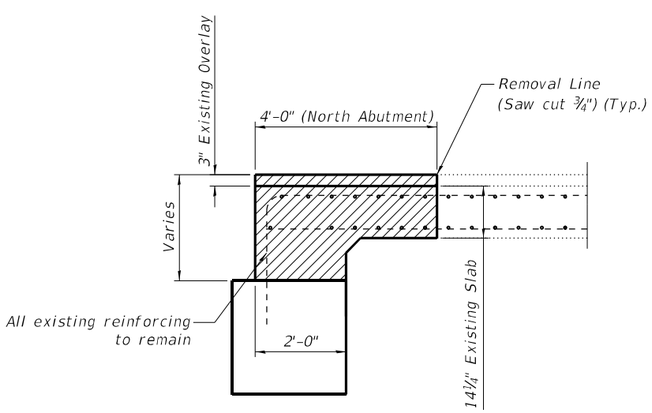

SECTION A-A

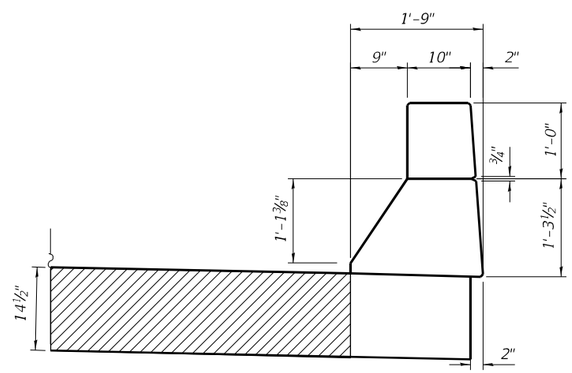

SECTION B-B

NOTES:

Existing reinforcement bars extending into the removal area shall be cleaned, straightened and incorporated into the New Construction. Any reinforcement bars that are damaged during Concrete Removal shall be replaced with an approved bar splicer or anchorage system. Cost included with Concrete Removal.

Removal of deck must be sequenced so that removals are staggered and adjacent sections are not removed at the same time.

BILL OF MATERIAL

Structure	Item	Unit	Total
057-0173	Concrete Removal	Cu. Yd.	10.3

MODEL: Concrete Removal
FILE NAME: P:\Effingham\3454 - PTB 189 IDOT D5 VA\Work Order #6\Cadd\Sheet\173 & 174\D70D64_0173_0174_Combined.dgn

CIVIL DESIGN, INC.
WBE / DBE
EFFINGHAM, IL
LICENSE #184.003222

USER NAME =	DESIGNED - KAS	REVISED -	
	CHECKED - TJZ	REVISED -	
PLOT SCALE =	DRAWN - DWS	REVISED -	
PLOT DATE =	CHECKED - KAS	REVISED -	

STATE OF ILLINOIS
DEPARTMENT OF TRANSPORTATION

CONCRETE REMOVAL
S.N. 057-0173 (SB)

SHEET 8 OF 11 SHEETS

F.A.I. RTE.	SECTION	COUNTY	TOTAL SHEETS	SHEET NO.
55	(57-1,57-2)BDS	MCLEAN	88	54

CONTRACT NO. 70D64
ILLINOIS FED. AID PROJECT

11/29/2021 12:43:40 PM

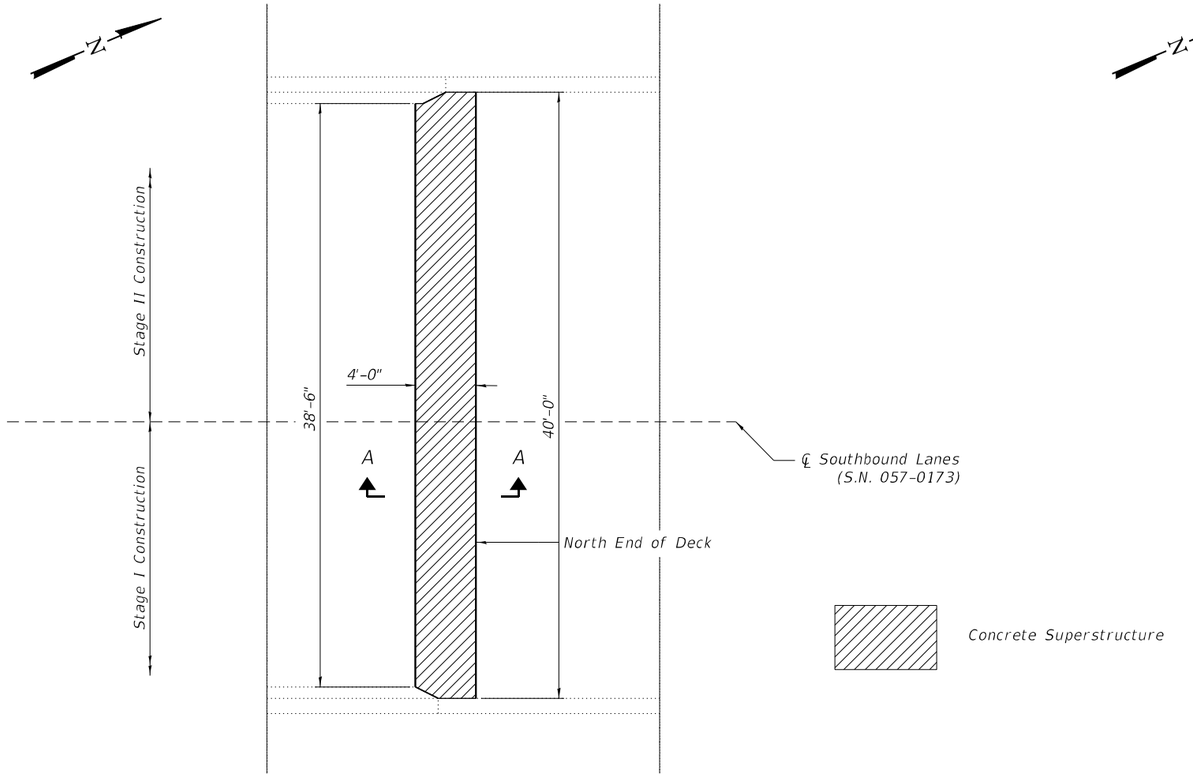

PLAN

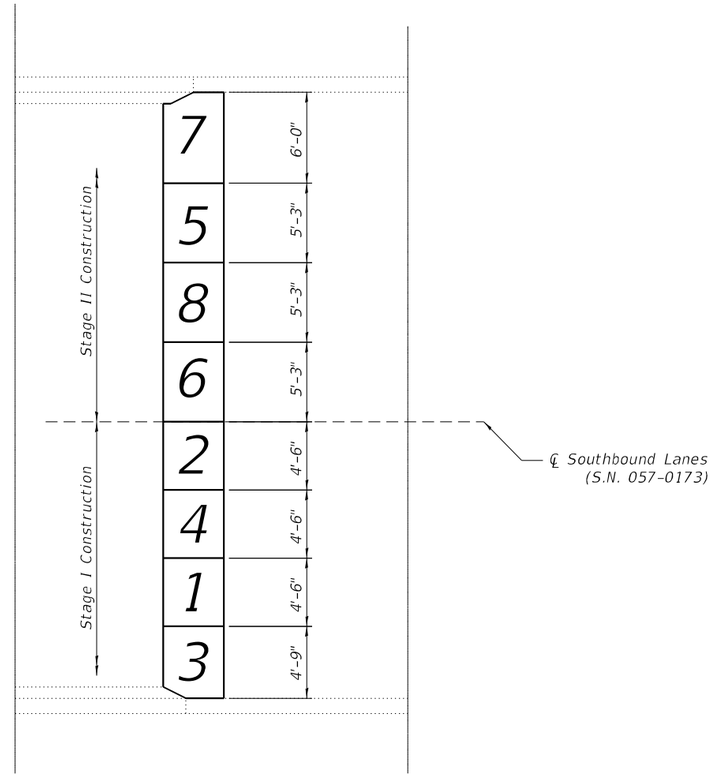

DECK REPAIR SEQUENCE

Remove and replace sections in the following order:
1 & 2 before 3 & 4
5 & 6 before 7 & 8

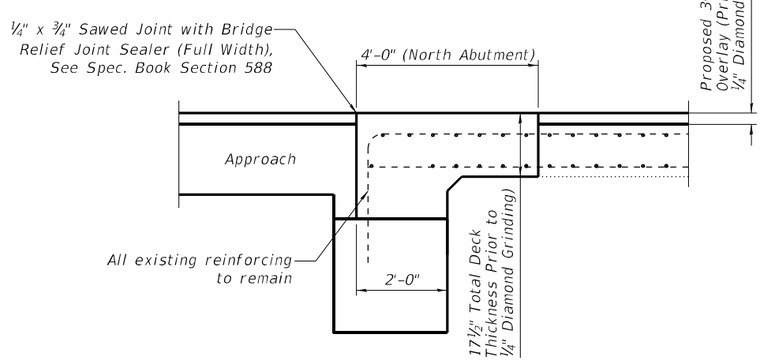

SECTION A-A

NOTES:

Existing reinforcement bars extending into the removal area shall be cleaned, straightened and incorporated into the New Construction. Any reinforcement bars that are damaged during Concrete Removal shall be replaced with an approved bar splicer or anchorage system. Cost included with Concrete Removal.

Removal of deck must be sequenced so that removals are staggered and adjacent sections are not removed at the same time.

Cost of Sawed Joint and Bridge Relief Joint Sealer included with Bridge Deck Microsilica Concrete Overlay, 2¼".

BILL OF MATERIAL

Structure	Item	Unit	Total
057-0173	Concrete Superstructure	Cu. Yd.	10.3

MODEL: Concrete Superstructure
FILE NAME: P:\Effingham\3454 - PTB 189 IDOT D5 V-A\Work Order #6\Cadd\Sheet\173 & 174\D570D64_0173_0174_Combined.dgn
11/29/2021 12:44:17 PM

CDI CIVIL DESIGN, INC. WBE / DBE EFFINGHAM, IL LICENSE #184.003222

USER NAME =	DESIGNED - KAS	REVISED -	
	CHECKED - TJZ	REVISED -	
PLOT SCALE =	DRAWN - DWS	REVISED -	
PLOT DATE =	CHECKED - KAS	REVISED -	

STATE OF ILLINOIS
DEPARTMENT OF TRANSPORTATION

CONCRETE SUPERSTRUCTURE
S.N. 057-0173 (SB)

SHEET 9 OF 11 SHEETS

F.A.I. RTE.	SECTION	COUNTY	TOTAL SHEETS	SHEET NO.
55	(57-1,57-2)BDS	MCLEAN	88	55

CONTRACT NO. 70D64

ILLINOIS FED. AID PROJECT

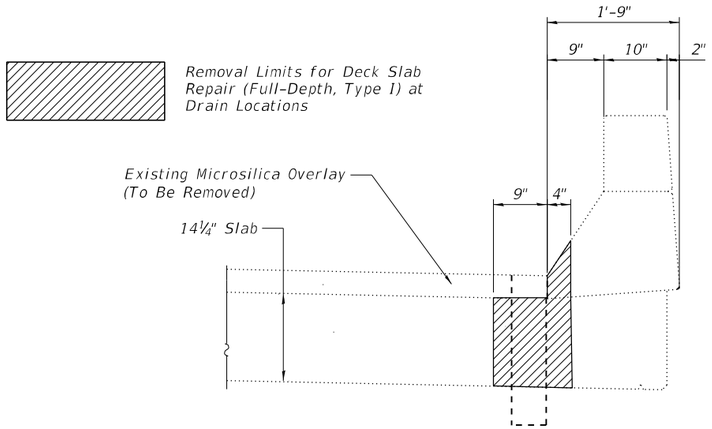

TYPICAL REMOVAL LIMITS

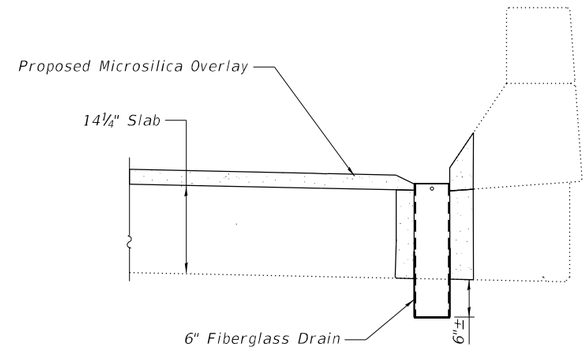

TYPICAL DRAIN REPLACEMENT

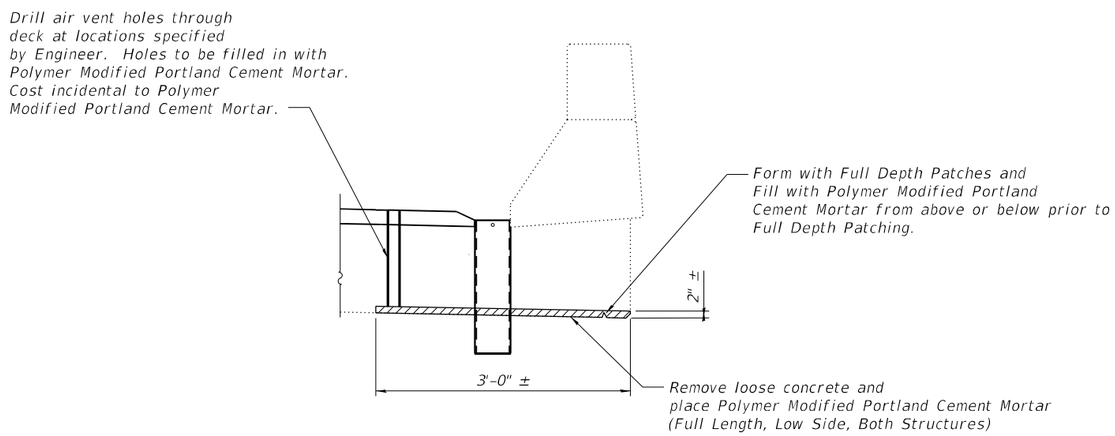

TYPICAL MORTAR REPAIR

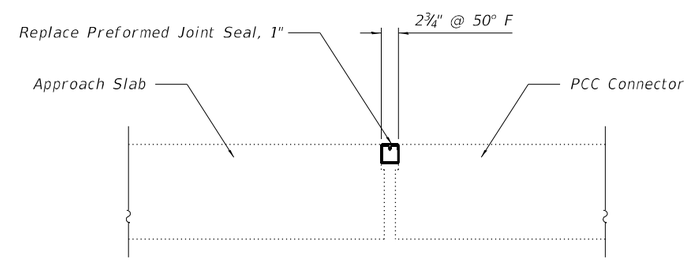

PREFORMED JOINT REPLACEMENT DETAIL

S.N. 057-0173 North & South Approach
S.N. 057-0174 North & South Approach

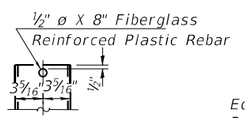

FIBERGLASS PIPE

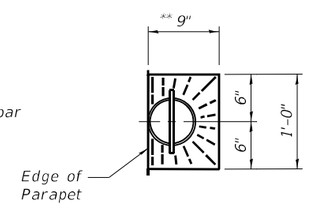

TOP PLAN

** Slope to Drain

NOTES:

All dimensions shall be field verified by the Contractor prior to ordering of materials.

Extreme care shall be taken when removing concrete and placing new floor drains around existing slab reinforcing. Some minor deformation of the new floor drains may be necessary in order to facilitate placement around existing reinforcement.

Fiberglass pipe shall conform to ASTM 02296, with short-time rupture strength hoop tensile stress of 30,000 psi minimum.

The exterior surfaces of the floor drains shall be painted according to Article 506 with the finish coat as specified.

The exterior surfaces of the drains shall be cleaned according to the Society of Protective Coating Spec. SSPC-SP1 prior to painting.

BILL OF MATERIAL

Structure	Item	Unit	Total
057-0173	Floor Drains	Each	4
057-0174	Floor Drains	Each	4

Cost of removal of existing drains and extensions is included in Deck Slab Repair (Full Depth, Type I).

MODEL: Floor Drain Details
FILE NAME: P:\Effingham\3454 - PTB 189 IDOT D5 VA\Work Order #6\Cadd\Sheet\173 & 174\D570D64_0173_0174_Combined.dgn
11/29/2021 12:45:11 PM

CDI CIVIL DESIGN, INC. WBE / DBE EFFINGHAM, IL LICENSE #184.003222

USER NAME =	DESIGNED - KAS	REVISED -	
	CHECKED - TJZ	REVISED -	
PLOT SCALE =	DRAWN - DWS	REVISED -	
PLOT DATE =	CHECKED - KAS	REVISED -	

STATE OF ILLINOIS
DEPARTMENT OF TRANSPORTATION

FLOOR DRAIN DETAILS
S.N. 057-0173 (SB) & S.N. 057-0174 (NB)
SHEET 10 OF 11 SHEETS

F.A.I. RTE.	SECTION	COUNTY	TOTAL SHEETS	SHEET NO.
55	(57-1,57-2)BDS	MCLEAN	88	56

CONTRACT NO. 70D64
ILLINOIS FED. AID PROJECT

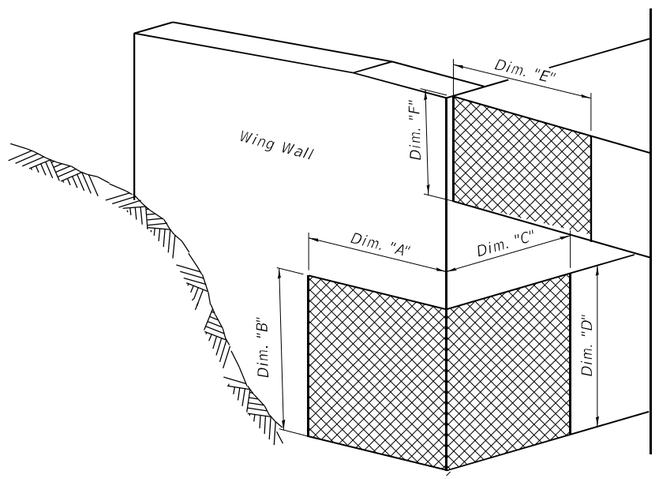

ISOMETRIC VIEW AT ABUTMENT CORNER

S.N. 057-0173
TABLE FOR STRUCTURAL REPAIR OF CONCRETE

ABUTMENT CORNER	Repair Area Dimensions						Repair Area Sq. Ft.
	Wingwall		Backwall		Slab Edge		
	A	B	C	D	E	F	
Northeast	3	4	2	3	1	1	19
Southeast	–	–	–	–	–	–	–
Northwest	–	–	2	2	3	1	7
Southwest	2	2	–	–	–	–	4

S.N. 057-0174
TABLE FOR STRUCTURAL REPAIR OF CONCRETE

ABUTMENT CORNER	Repair Area Dimensions						Repair Area Sq. Ft.
	Wingwall		Backwall		Slab Edge		
	A	B	C	D	E	F	
Northeast	2	3	–	–	1	1	7
Southeast	–	–	–	–	3	1	3
Northwest	3	3	1	1	2	2	14
Southwest	1	3	–	–	3	1	6

Structural Repair of Concrete
Depth equal to or Less than 5"

NOTE:

See Special Provision for Structural Repair of Concrete.

BILL OF MATERIAL

Structure	Item	Unit	Total
057-0173	Structural Repair of Concrete, Depth Equal to or Less than 5"	Sq. Ft.	30
057-0174	Structural Repair of Concrete, Depth Equal to or less than 5"	Sq. Ft.	30

MODEL: Abutment Repairs
FILE NAME: P:\Effingham\3454 - PTB 189 IDOT D5 V-V\Work Order #6\Cadd\Sheet\173 & 174\D570D64_0173_0174_Combined.dgn

CIVIL DESIGN, INC.
WBE / DBE
EFFINGHAM, IL
LICENSE #184.003222

USER NAME =	DESIGNED – KAS	REVISED –	
	CHECKED – TJZ	REVISED –	
PLOT SCALE =	DRAWN – DWS	REVISED –	
PLOT DATE =	CHECKED – KAS	REVISED –	

STATE OF ILLINOIS
DEPARTMENT OF TRANSPORTATION

SUBSTRUCTURE REPAIR PLAN
S.N. 057–0173 (SB) & S.N. 057–0174 (NB)

SHEET 11 OF 11 SHEETS

F.A.I. RTE.	SECTION	COUNTY	TOTAL SHEETS	SHEET NO.
55	(57-1,57-2)BDS	MCLEAN	88	57
		CONTRACT NO. 70D64		
		ILLINOIS	FED. AID PROJECT	

10/21/2021 2:58:42 PM

Structure 057-0178 and Structure 057-0179 were originally constructed in 1977 as FAI 55, Section 57-1VB at Station 411+28.42 in McLean County. In 2003, the structures were repaired with Contract 66107 Section (57-1, 57-2)RS. The bituminous concrete overlay and waterproofing were removed. The separation between the bridge deck and steel beams at each abutment was repaired by removing 10' portion of the deck at each abutment, welding shear studs to the exposed beams, and replacing the deck. The remaining deck areas were overlaid with microsilica concrete. The expansion joints were removed and replaced with silicone joint sealer with polymer concrete nosing. The abutment bearings were replaced with elastomeric bearings. Drains within 10' of piers and abutments were plugged and other drains were extended below bottom of flanges of beams.

On S.N. 057-0178 repairs were made to the north pier cap and both abutments. On S.N. 057-0179 repairs were made to the north pier cap and backwall. The gap at the abutments and the slopewall failure were repaired with CLSM.

The existing structures are three span steel continuous multi beam bridges. The superstructure consists of six 30" WF steel girders supporting an 8" RC deck. The superstructure is supported by dual three-column piers on spread footings on creosoted timber piles and stub abutments on concrete piles. The slopes are protected with a concrete slopewall. The structures have an overall out-to-out width of 42'-0", and a deck (clear area) width of 38'-6" base to base of curb.

The structures have an overall length of 97'-0" from back to back of abutment. The deck has an out to out width of 42'-0", and a deck (clear area) width of 40'-0" from face to face of parapet and rail.

Note:
See Sheet 2 of 13 for Proposed Work, Bill of Material, and General Notes.

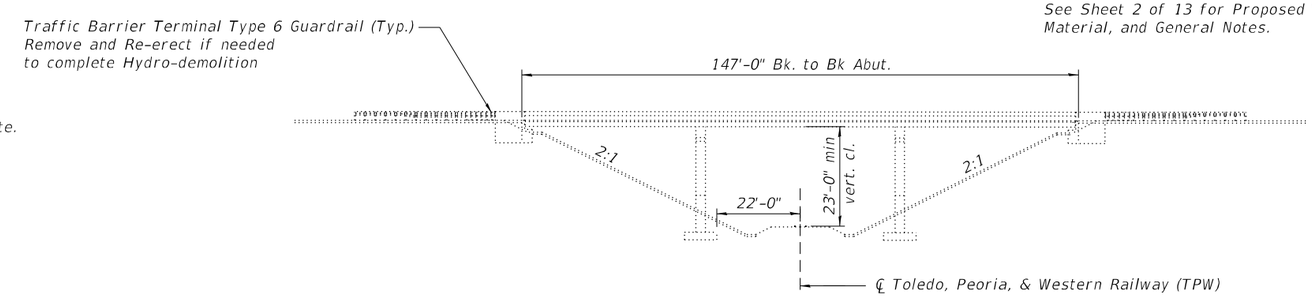

ELEVATION

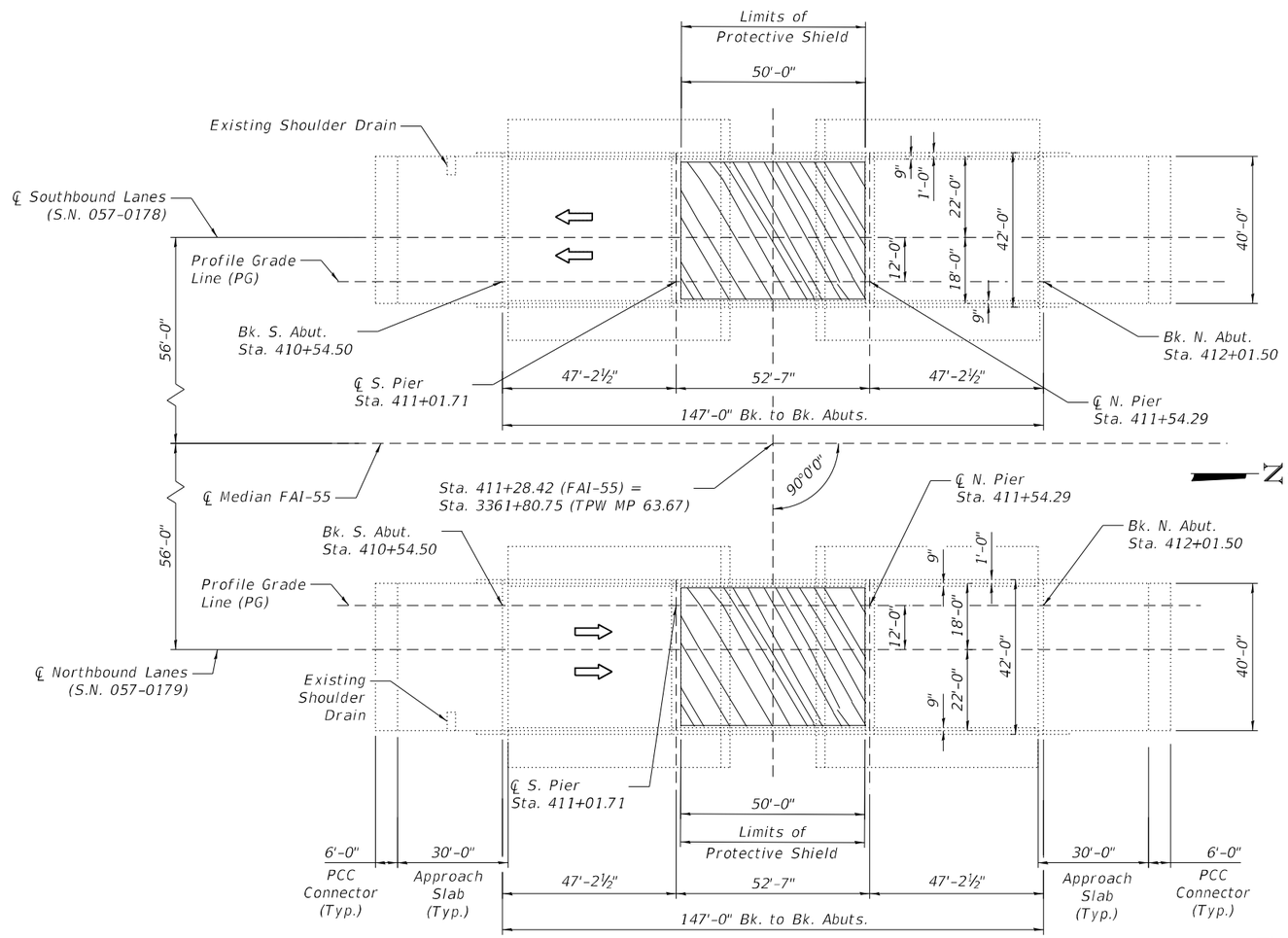

PLAN

DESIGN STRESSES
FIELD UNITS

New Construction
f'c = 4,000 psi
fy = 60,000 psi (Reinforcement)

Existing Structure
fc = 1,200 psi (Deck Slab)
fc = 1,400 psi (Curb, Parapet, Sub)
fs = 20,000 psi (Reinforcement)
fs = 20,000 psi (Structural Steel)

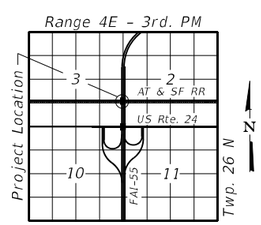

LOCATION SKETCH

LICENSED STRUCTURAL ENGINEER
ADAM D. BOHNHOFF
081-007431
STATE OF ILLINOIS

Adam Bohnhoff 10-21-2021
Adam D. Bohnhoff Date
Licensed Structural Engineer
State of Illinois No. 081-007431
Expires 11-30-2022

MODEL: GPE
FILE NAME: P:\Effingham\3454 - PTB 189 IDOT D5 V-V\Work Order #6\Cadd\Sheet\178\D570D64_0178_0179_Combined.dgn

CDI CIVIL DESIGN, INC. WBE / DBE EFFINGHAM, IL LICENSE #184.003222

USER NAME =	DESIGNED - KAS	REVISED -	
	CHECKED - TJZ	REVISED -	
PLOT SCALE =	DRAWN - DWS	REVISED -	
PLOT DATE =	CHECKED - KAS	REVISED -	

STATE OF ILLINOIS
DEPARTMENT OF TRANSPORTATION

GENERAL PLAN AND ELEVATION
S.N. 057-0178 (SB) & S.N. 057-0179 (NB)
SHEET 1 OF 13 SHEETS

F.A.I. RTE.	SECTION	COUNTY	TOTAL SHEETS	SHEET NO.
55	(57-1,57-2)BDS	MCLEAN	88	58
		CONTRACT NO. 70D64		
		ILLINOIS	FED. AID PROJECT	

10/21/2021 3:14:25 PM

TOTAL BILL OF MATERIAL SN 057-0178 & SN 057-0179

Item	Unit	Total
Protective Coat	Sq. Yd.	2080
Concrete Removal	Cu. Yd.	7.6
Protective Shield	Sq. Yd.	402
Concrete Superstructure	Cu. Yd.	7.6
Reinforcement Bars, Epoxy Coated	Pound	700
Bar Splicers	Each	16
Preformed Joint Strip Seal	Foot	176
Foam, Expanding Polyurethane, High-Density	Pound	24000
Slopewall Breaking	Sq. Yd.	667
Stone Dumped Riprap, Class A4 (Special)	Sq. Yd.	667
Bridge Deck Grooving (Longitudinal)	Sq. Yd.	1150
Bridge Deck Latex Concrete Overlay, 2¼"	Sq. Yd.	622
Bridge Deck Latex Concrete Overlay, 3"	Sq. Yd.	1212
Bridge Deck Scarification, 2"	Sq. Yd.	622
Bridge Deck Scarification, 2¾"	Sq. Yd.	1212
Structural Repair of Concrete (Depth = or < 5 Inches)	Sq. Ft.	377
Deck Slab Repair (Full Depth, Type I)	Sq. Yd.	36
Diamond Grinding (Bridge Section)	Sq. Yd.	1678
Railroad Protective Liability Insurance	L. Sum	1
Preformed Joint Seal, 1"	Foot	160

INDEX OF SHEETS

PROPOSED WORK

1. Perform Bridge Deck Scarification on Bridge Deck, Approach Slabs, and PCC Connectors.
2. Partial Removal of Deck Ends and Parapets.
3. Removal of Existing Joints.
4. Perform Full-Depth Patching and Partial Depth Repair of Approach Slabs.
5. Perform Substructure and Shallow Parapet Repairs.
6. Pour Deck Ends.
7. Insert Rubber Strip Seal into Locking Edge Rails.
8. Replace Joints at Approach Ends.
9. Pour Parapets.
10. Place Latex Concrete Overlay on Bridge Deck, Approach Slabs, and PCC Connectors.
11. Remove Slopewall.
12. Place Riprap.
13. Raise Approach Slabs to Original Elevations.
14. Apply Protective Coat.

GENERAL NOTES

Plan dimensions and details relative to the existing structure have been taken from existing plans and are subject to nominal construction variations. It shall be the Contractor's responsibility to verify such dimensions and details in the field and make the necessary approved adjustments prior to construction or ordering of materials. Such variations shall not be cause for additional compensation for a change in the scope of work. However, the Contractor will be paid for the quantity actually furnished at the unit price for the work.

Reinforcement bars designated (E) shall be epoxy coated.

Prior to pouring the new concrete deck, all heavy or loose rust, loose mill scale, and other loose or potentially detrimental foreign material shall be removed from the surfaces in contact with concrete. Tightly adhered paint may remain unless otherwise noted. Removal shall be accomplished by methods that will not damage the steel and the cost will be included in the pay item covering removal of the existing concrete.

Existing structural steel that will be in contact with new structural steel shall be cleaned and painted prior to erection as required by the Special Provision "Cleaning and Painting Contact Surface Areas of Existing Steel Structures".

Existing reinforcement bars extending into the removal area shall be cleaned, straightened and incorporated into the new construction. Any reinforcement bars that are damaged during concrete removal shall be replaced with approved bar splicer or anchorage system. Cost included with Concrete Removal.

Joint openings shall be adjusted according to Article 520.04 of the Std. Specs. when the deck is poured at an ambient temperature other than 50° F.

Up to ¼" may be ground off the bridge deck and bridge approach slabs through Diamond Grinding.

Expansion joints shall be fabricated and installed according to the manufacturer's recommendations and as approved by the Engineer. Expansion joints shall be fabricated to conform to the existing cross slopes of the bridge.

Protective Coat shall be applied from end to end of approaches to entire deck surface and along the vertical faces of the parapets.

Contractor to notify G&W Public Projects Department 30 days prior to starting construction.

G&W flagging services will be required for all work within G&W right of way or any work that has a "potential to foul".

The contractor must not use the railroad right of way for storage of materials or equipment during construction. The railroad right of way must remain clear at all times. The contractor must plan and perform the work in a manner such that the railroad tracks at the project location remain fully capable of operating rail traffic throughout the work period and rail traffic is not delayed or otherwise impacted due to the work being performed.

All work performed on, above or adjacent to the railroad property shall be in accordance with the TPWR Public Project Manual. Work plans shall be submitted for review to the Railroad for all work that presents the potential to affect railroad property or operations. All work plans shall be prepared and submitted to the Railroad in adherence with the TPWR Public Project Manual, Section 1.11 Construction Submission Criteria.

Synthetic fibers shall be included in the bridge deck concrete overlay specified. See Special Provisions.

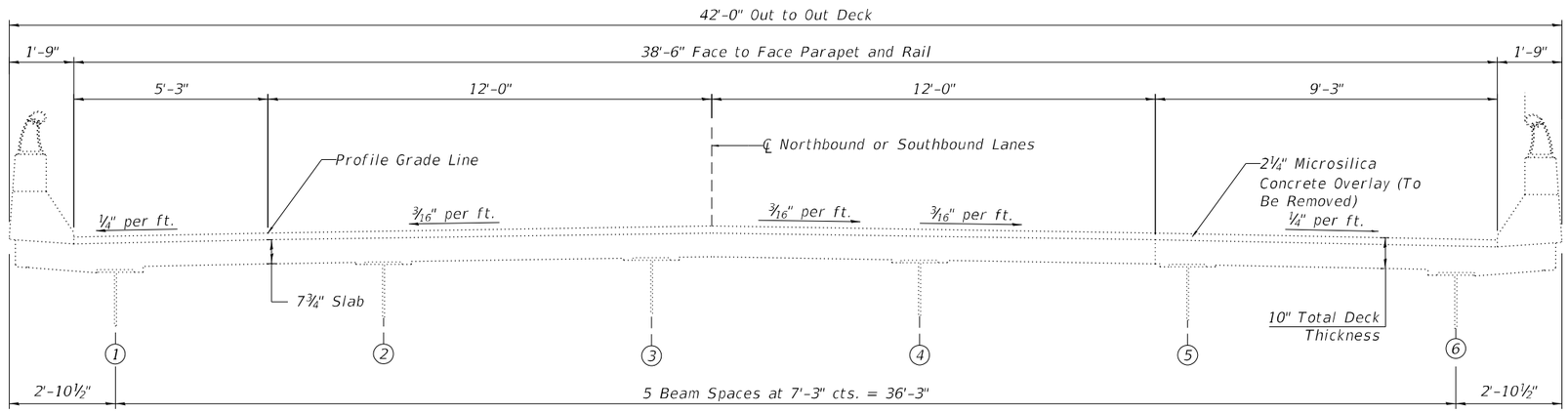

EXISTING CROSS SECTION

(S.N. 057-0178 Looking South)
(S.N. 057-0179 Looking North)

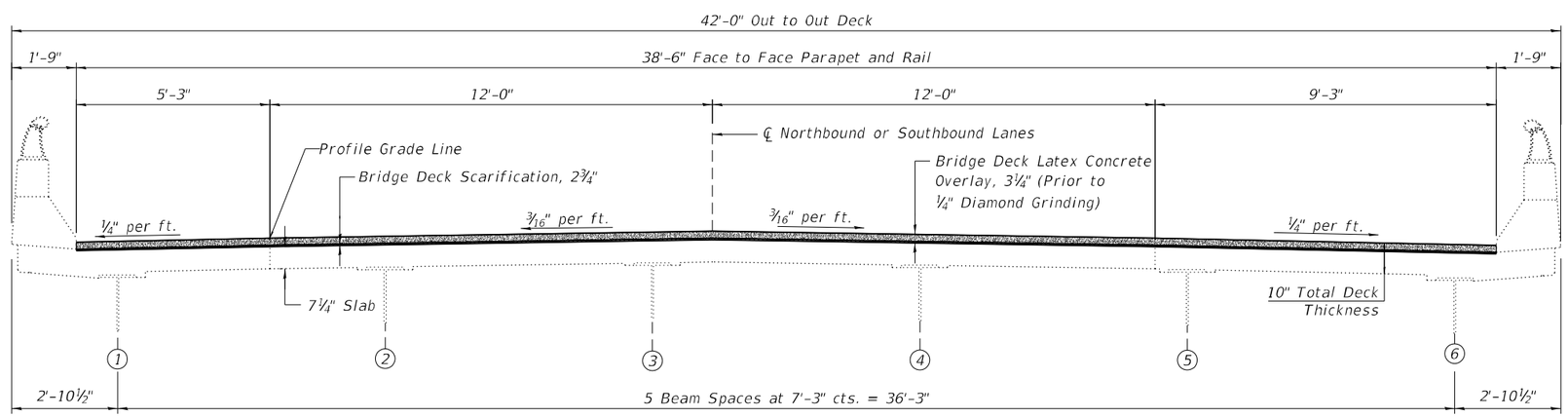

PROPOSED CROSS SECTION

(S.N. 057-0178 Looking South)
(S.N. 057-0179 Looking North)

MODEL: Cross Sections
FILE NAME: P:\Effingham\3454 - PTB 189 IDOT D5 VA\Work Order #6\Cadd\Sheet\178\D570D64_0178_0179_Combined.dgn

CDI CIVIL DESIGN, INC. WBE / DBE EFFINGHAM, IL LICENSE #184.003222

USER NAME =	DESIGNED - KAS	REVISED -	
	CHECKED - TJZ	REVISED -	
PLOT SCALE =	DRAWN - DWS	REVISED -	
PLOT DATE =	CHECKED - KAS	REVISED -	

STATE OF ILLINOIS
DEPARTMENT OF TRANSPORTATION

EXISTING AND PROPOSED TYPICAL CROSS SECTIONS
S.N. 057-0178 (SB) & S.N. 057-0179 (NB)

SHEET 3 OF 13 SHEETS

F.A.I. RTE.	SECTION	COUNTY	TOTAL SHEETS	SHEET NO.
55	(57-1,57-2)BDS	MCLEAN	88	60
		CONTRACT NO. 70D64		
		ILLINOIS	FED. AID PROJECT	

10/21/2021 3:14:29 PM

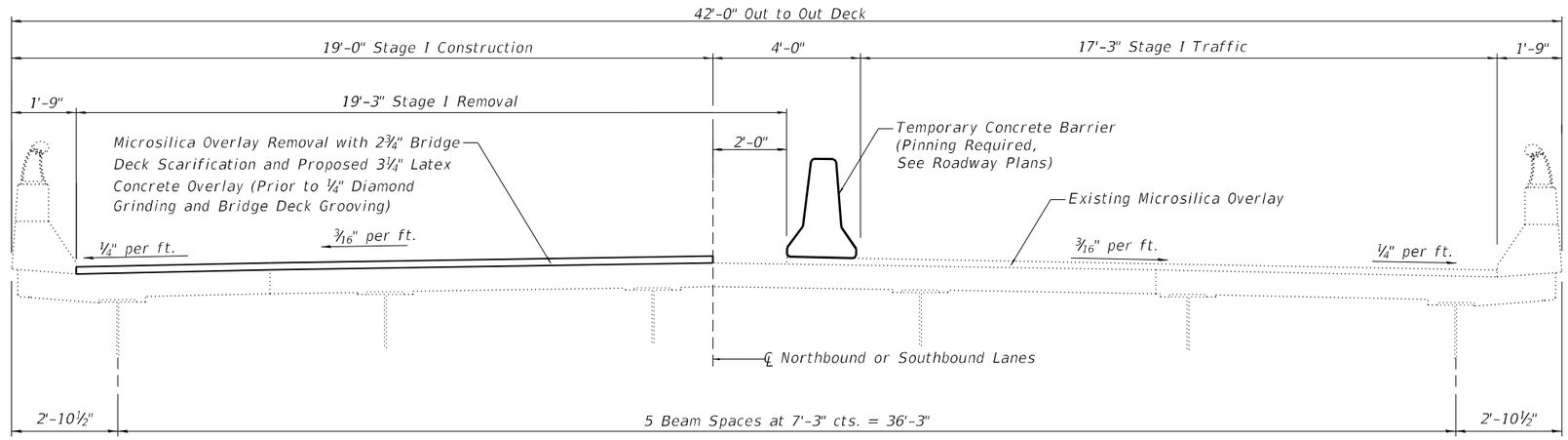

STAGE I CONSTRUCTION DETAILS

(S.N. 057-0178 Looking South)
(S.N. 057-0179 Looking North)

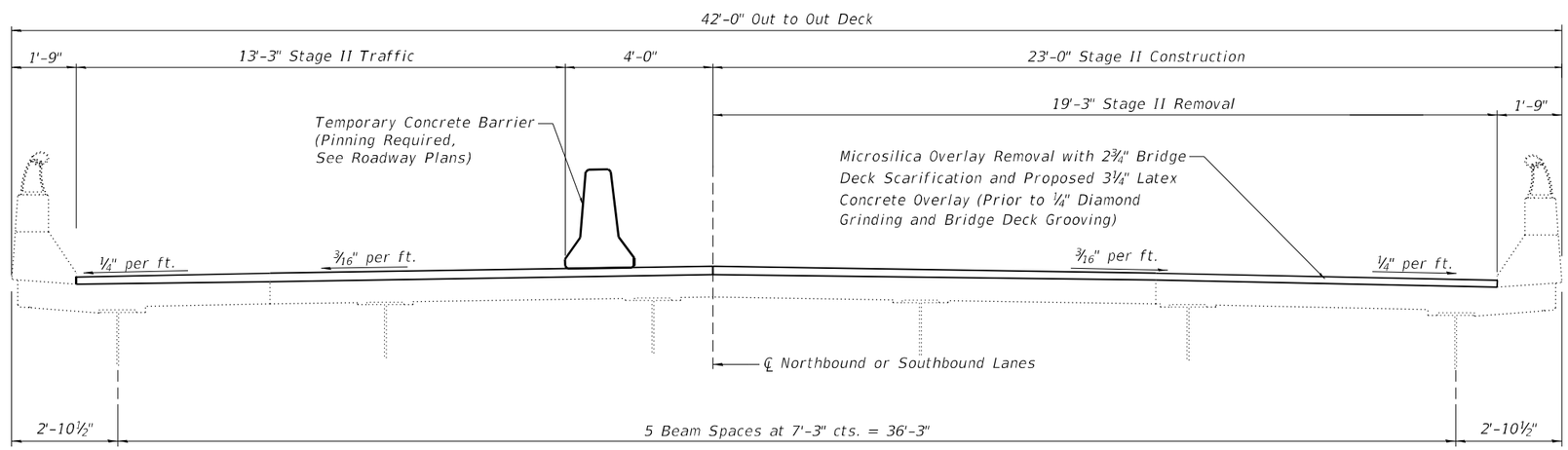

STAGE II CONSTRUCTION DETAILS

(S.N. 057-0178 Looking South)
(S.N. 057-0179 Looking North)

MODEL: Stage Construction
FILE NAME: P:\Effingham\3454 - PTB 189 IDOT D5 VA\Work Order #6\Cadd\Sheet\178\D570D64_0178_0179_Combined.dgn

CDI CIVIL DESIGN, INC. WBE / DBE EFFINGHAM, IL LICENSE #184.003222	USER NAME =	DESIGNED - KAS	REVISED -	STATE OF ILLINOIS DEPARTMENT OF TRANSPORTATION	STAGE CONSTRUCTION DETAILS S.N. 057-0178 (SB) & S.N. 057-0179 (NB)	F.A.I. RTE.	SECTION	COUNTY	TOTAL SHEETS / SHEET NO.
		CHECKED - TJZ	REVISED -			55	(57-1,57-2)BDS	MCLEAN	88 / 61
	PLOT SCALE =	DRAWN - DWS	REVISED -					CONTRACT NO. 70D64	
	PLOT DATE =	CHECKED - KAS	REVISED -		SHEET 4 OF 13 SHEETS			ILLINOIS FED. AID PROJECT	

10/21/2021 3:14:30 PM

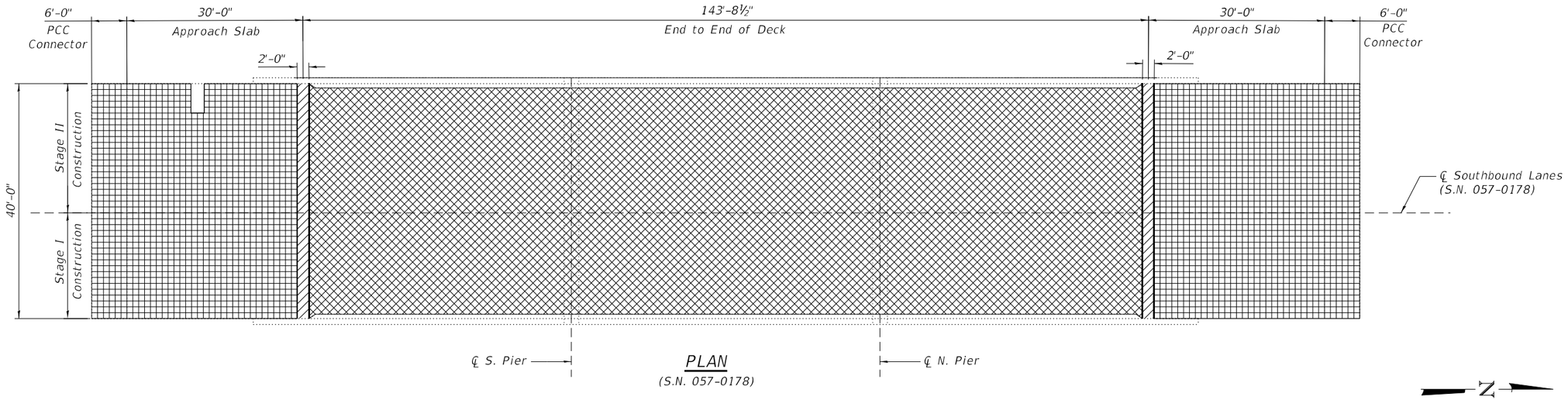

PLAN
(S.N. 057-0178)

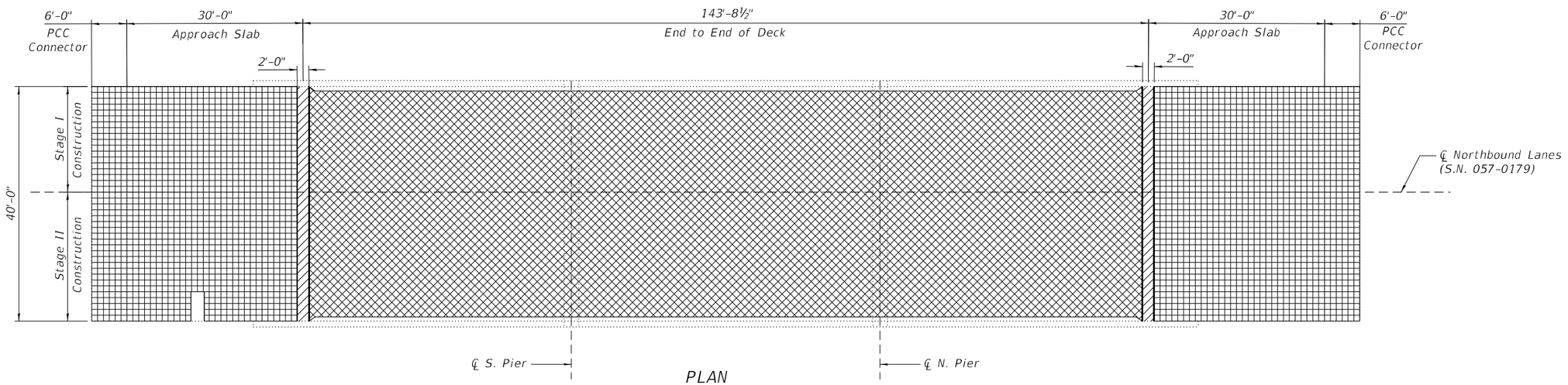

PLAN
(S.N. 057-0179)

Note:
Care must be taken not to damage the existing shoulder drains.

Bridge Deck Scarification, 2", Bridge Deck Latex Concrete Overlay, 2¼", Diamond Grinding, ¼" and Bridge Deck Grooving (Longitudinal)

Bridge Deck Scarification, 2¾", Bridge Latex Concrete Overlay, 3", Diamond Grinding, ¼" and Bridge Deck Grooving (Longitudinal)

Diamond Grinding ¼" and Bridge Deck Grooving (Longitudinal)

BILL OF MATERIAL
(Deck & Approach)

Structure	Item	Unit	Total
057-0178	Bridge Deck Latex Concrete Overlay, 3"	Sq. Yd.	606
	Bridge Deck Latex Concrete Overlay, 2¼"	Sq. Yd.	311
	Bridge Deck Scarification, 2¾"	Sq. Yd.	606
	Bridge Deck Scarification, 2"	Sq. Yd.	311
	Bridge Deck Grooving (Longitudinal)	Sq. Yd.	575
	Diamond Grinding (Bridge Section)	Sq. Yd.	839

Structure	Item	Unit	Total
057-0179	Bridge Deck Latex Concrete Overlay, 3"	Sq. Yd.	606
	Bridge Deck Latex Concrete Overlay, 2¼"	Sq. Yd.	311
	Bridge Deck Scarification, 2¾"	Sq. Yd.	606
	Bridge Deck Scarification, 2"	Sq. Yd.	311
	Bridge Deck Grooving (Longitudinal)	Sq. Yd.	575
	Diamond Grinding (Bridge Section)	Sq. Yd.	839

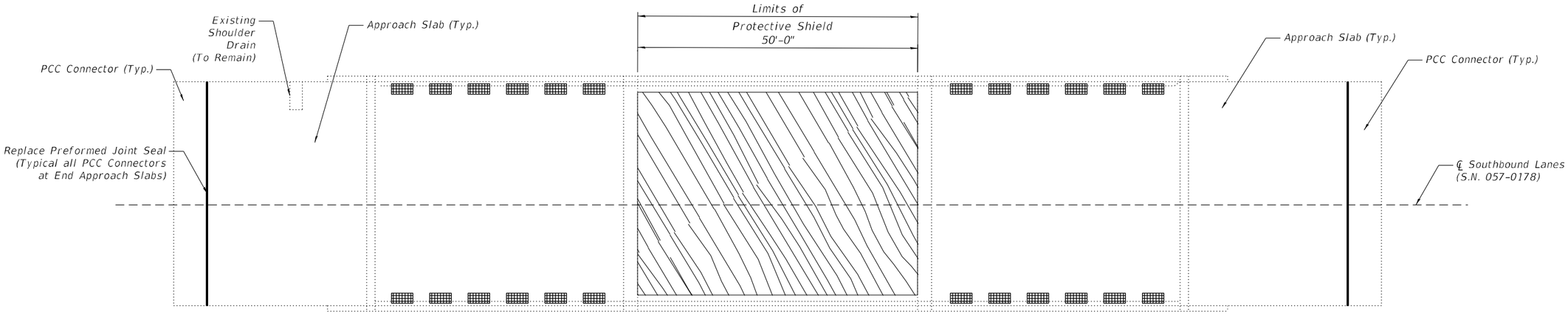

PLAN

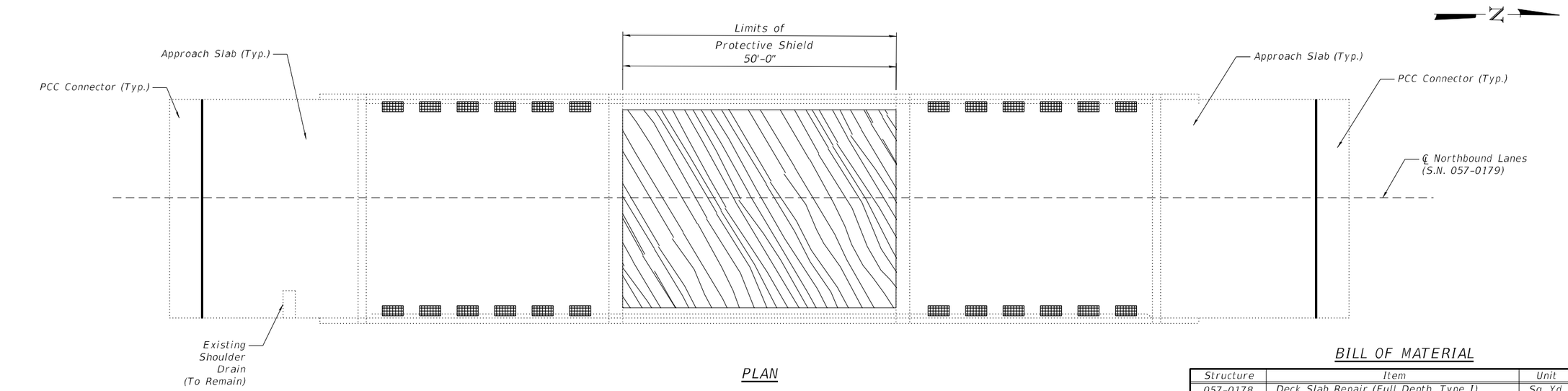

PLAN

LEGEND

Deck Slab Repair (Full Depth, Type I) at all Drain Locations.
All repair areas are 2'-0" x 1'-1", unless otherwise noted.

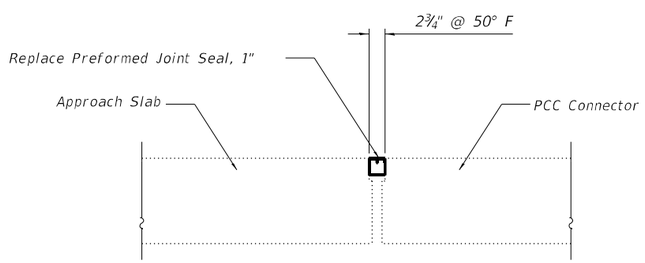

PREFORMED JOINT REPLACEMENT DETAIL

(North & South Approach Both Structures)

BILL OF MATERIAL

Structure	Item	Unit	Total
057-0178	Deck Slab Repair (Full Depth, Type I)	Sq. Yd.	18
057-0178	Preformed Joint Seal, 1"	Foot	80
057-0178	Protective Shield	Sq. Yd.	201
057-0179	Deck Slab Repair (Full Depth, Type I)	Sq. Yd.	18
057-0179	Preformed Joint Seal, 1"	Foot	80
057-0179	Protective Shield	Sq. Yd.	201

NOTES:

Patch sizes shown represent conditions at the time the plans were completed. An Estimated 2% of the Deck Area has been included should additional Deck Slab Repair (Full Depth, Type I) be required after Bridge Deck Scarification.

The actual sizes and locations of patching shall be determined by the Resident Engineer after removal of the wearing surface, before patching operations begin. The Engineer Shall show the actual locations of the deck repairs on this sheet.

The existing drains and extensions shall be removed. Cost included with Deck Slab Repair (Full Depth, Type I).

Care must be taken not to damage the existing shoulder drains.

Extreme care must be used when removing concrete near the top flange of the beams. The Contractor is responsible for any damage to the beams.

MODEL: Patching
FILE NAME: P:\Effingham\3454 - PTB 189 IDOT D5 VA\Work Order #6\Cadd\Sheet\178\D570D64_0178_0179_Combined.dgn
11/29/2021 1:00:34 PM

CIVIL DESIGN, INC.
WBE / DBE
EFFINGHAM, IL
LICENSE #184.003222

USER NAME =	DESIGNED - KAS	REVISED -	
	CHECKED - TJZ	REVISED -	
PLOT SCALE =	DRAWN - DWS	REVISED -	
PLOT DATE =	CHECKED - KAS	REVISED -	

STATE OF ILLINOIS
DEPARTMENT OF TRANSPORTATION

FLOOR DRAIN AND PATCHING DETAILS
S.N. 057-0178 (SB) & S.N. 057-0179 (NB)

SHEET 6 OF 13 SHEETS

F.A.I. RTE.	SECTION	COUNTY	TOTAL SHEETS	SHEET NO.
55	(57-1,57-2)BDS	MCLEAN	88	63

CONTRACT NO. 70D64

ILLINOIS FED. AID PROJECT

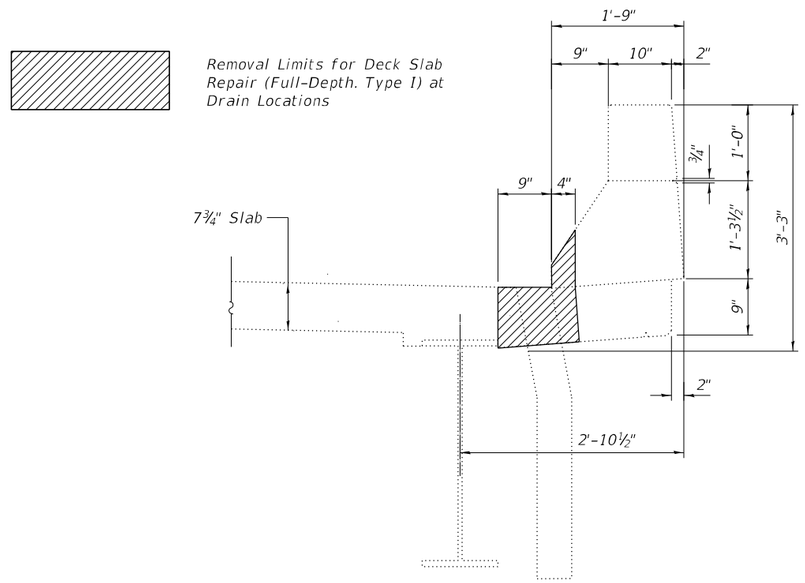

NOTES:

Cost of removal of existing drains and extensions is included in Deck Slab Repair (Full Depth, Type I)

TYPICAL FLOOR DRAIN REMOVAL LIMITS

MODEL: Floor Drain
FILE NAME: P:\Effingham\3454 - PTB 189 IDOT D5 VA\Work Order #6\Cadd\Sheet\1178\D570D64_0178_0179_Combined.dgn

CDI CIVIL DESIGN, INC. WBE / DBE EFFINGHAM, IL LICENSE #184.003222

USER NAME =	DESIGNED - KAS	REVISED -	
	CHECKED - TJZ	REVISED -	
PLOT SCALE =	DRAWN - DWS	REVISED -	
PLOT DATE =	CHECKED - KAS	REVISED -	

STATE OF ILLINOIS
DEPARTMENT OF TRANSPORTATION

FLOOR DRAIN DETAILS
S.N. 057-0178 (SB) & S.N. 057-0179 (NB)

SHEET 7 OF 13 SHEETS

F.A.I. RTE.	SECTION	COUNTY	TOTAL SHEETS	SHEET NO.
55	(57-1,57-2)BDS	MCLEAN	88	64

CONTRACT NO. 70D64

ILLINOIS FED. AID PROJECT

10/21/2021 3:14:33 PM

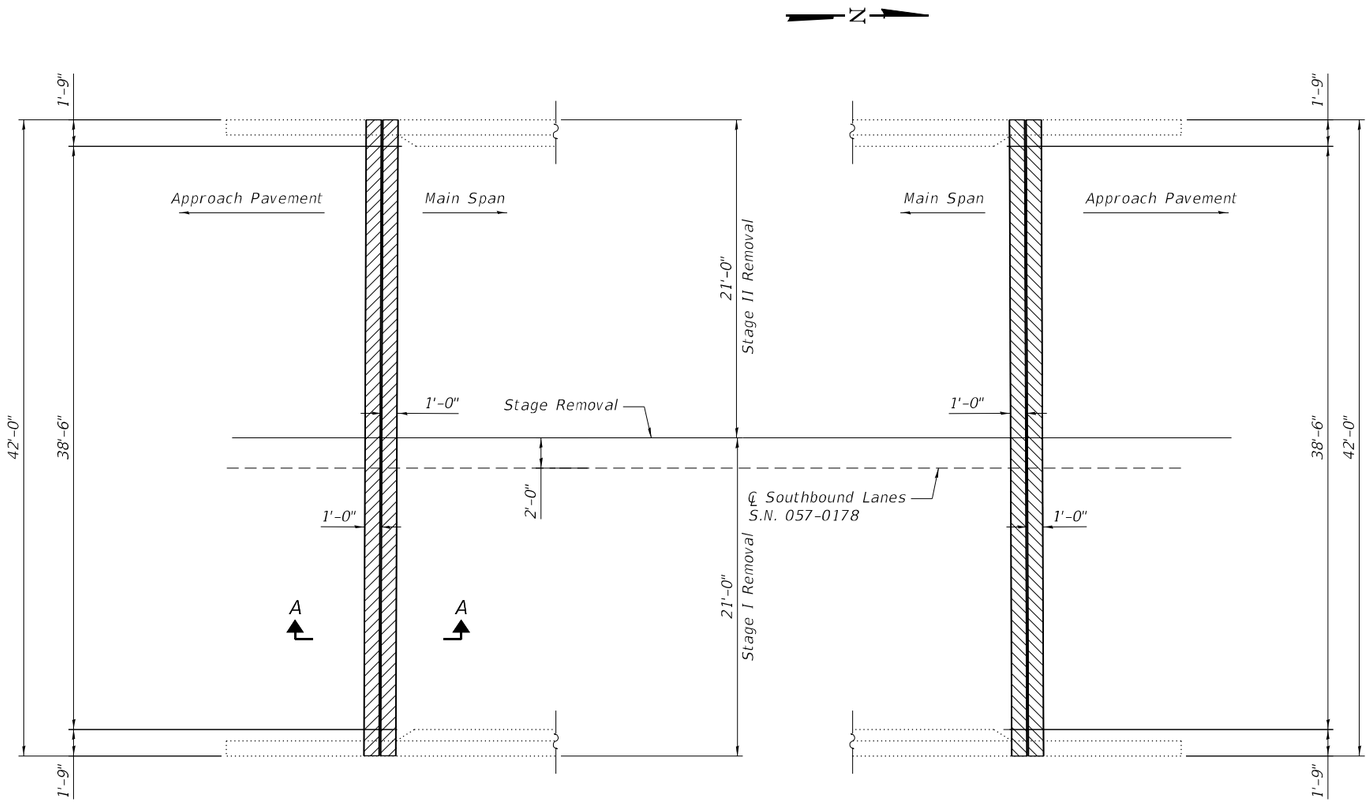

SOUTH ABUTMENT PLAN

NORTH ABUTMENT PLAN

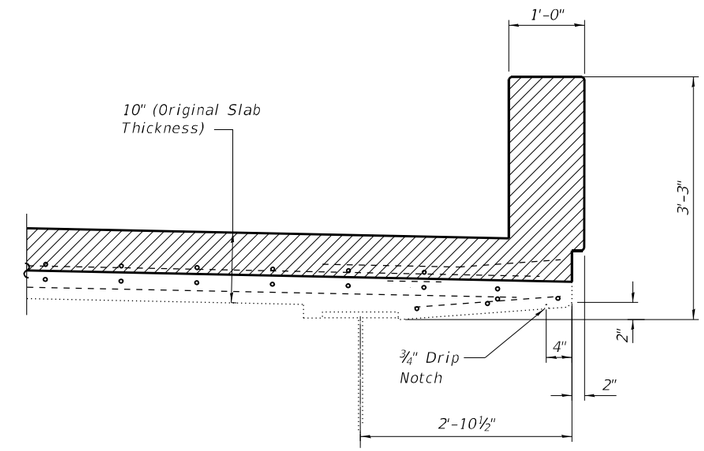

SECTION AT PARAPET

Note:
All Existing Reinforcement to remain in place.

Note: S.N. 057-0178 shown, S.N. 057-0179 similar

Concrete Removal

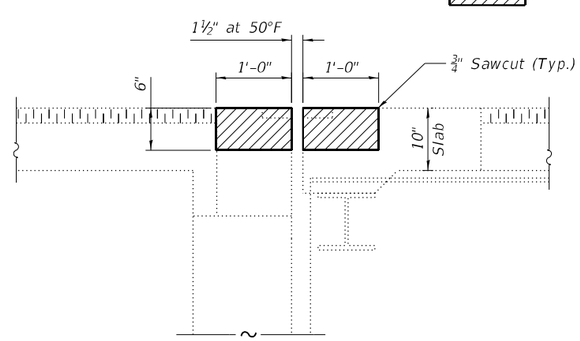

SECTION A-A

NOTES:

Existing reinforcement bars extending into the removal area shall be cleaned, straightened and incorporated into the New Construction. Any reinforcement bars that are damaged during Concrete Removal shall be replaced with an approved bar splicer or anchorage system. Cost included with Concrete Removal.

The existing expansion joint system shall be removed completely, as well as any foreign material that has accumulated or been placed in the joint openings. The cost for this work is included in Concrete Removal and no addtitional compensation will be allowed.

The handrail attached to the top of the parapets shall be unbolted to allow for the removal and placement of the parapet ends. Following completion of the parapet ends, the handrail shall be re-attached. The cost of this work shall be included in Concrete Superstructures.

All existing deck tie downs shall be removed. Cost included with Concrete Removal.

BILL OF MATERIAL

Structure	Item	Unit	Total
057-0178	Concrete Removal	Cu. Yd.	3.8
057-0179	Concrete Removal	Cu. Yd.	3.8

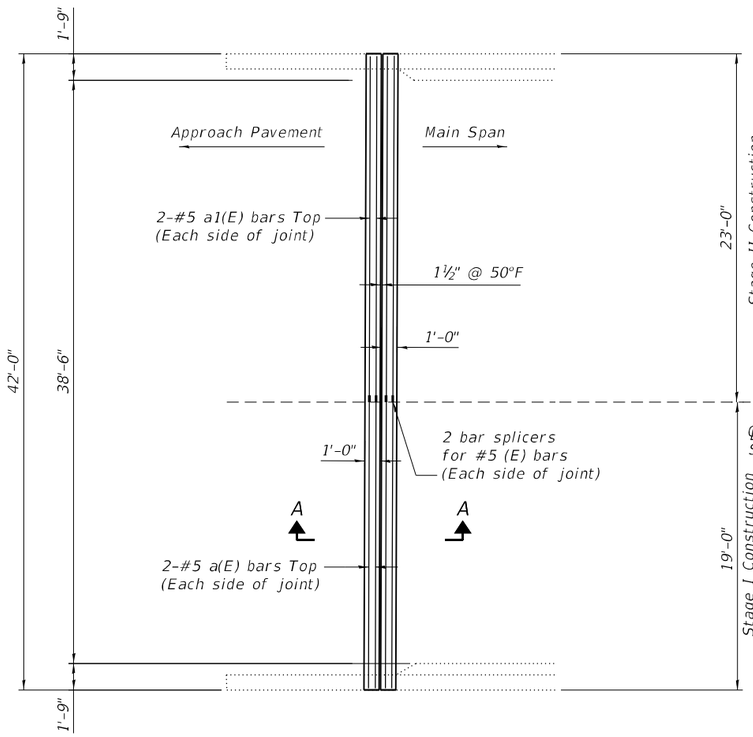

SOUTH ABUTMENT PLAN

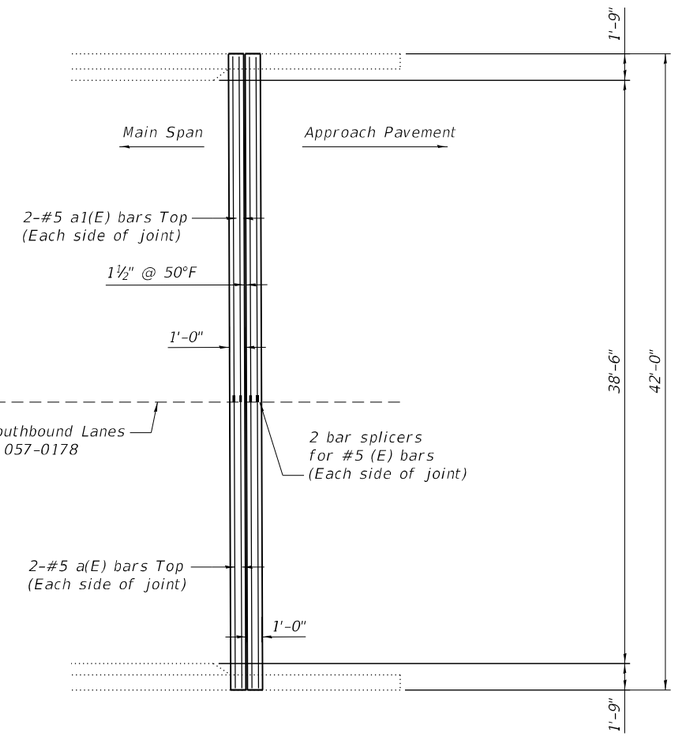

NORTH ABUTMENT PLAN

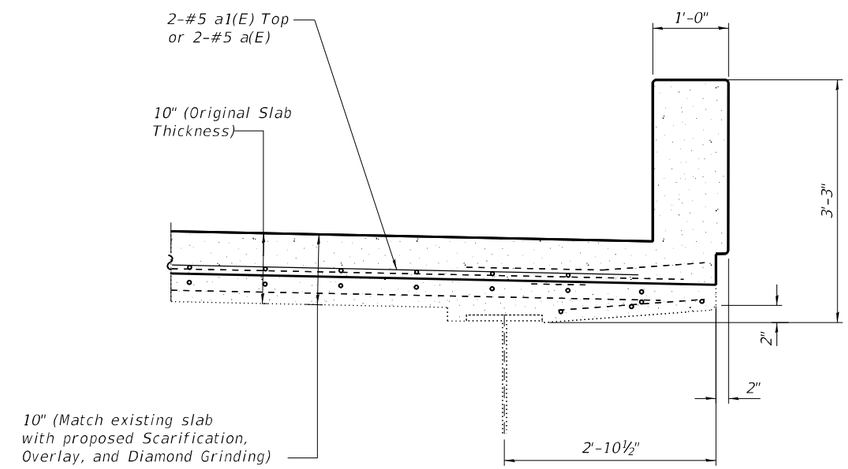

SECTION AT PARAPET

Note:
All Existing Reinforcement to remain in Place.

Note: S.N. 057-0178 shown, S.N. 057-0179 similar

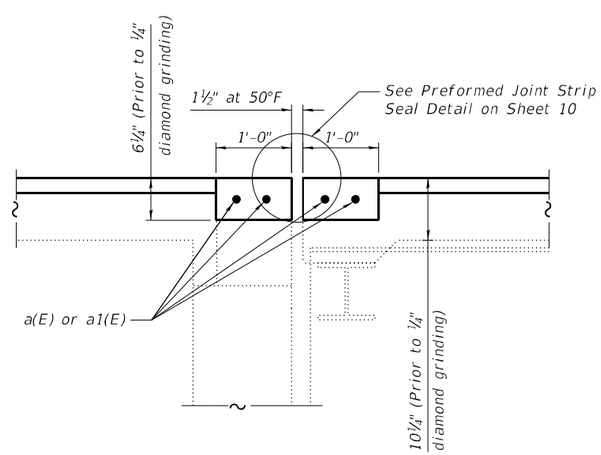

SECTION A-A

BILL OF MATERIAL
(S.N. 057-0178)

Bar	No.	Size	Length	Shape
a(E)	8	#5	18'-9"	———
a1(E)	8	#5	22'-8"	———
Reinforcement Bars, Epoxy Coated			Pound	350
Concrete Superstructure			Cu. Yd.	3.8

BILL OF MATERIAL
(S.N. 057-0179)

Bar	No.	Size	Length	Shape
a(E)	8	#5	18'-9"	———
a1(E)	8	#5	22'-8"	———
Reinforcement Bars, Epoxy Coated			Pound	350
Concrete Superstructure			Cu. Yd.	3.8

MODEL: Joint Recon2
FILE NAME: P:\Effingham\3454 - PTB 189 IDOT D5 V-V\Work Order #6\Cadd\Sheet\178\D570D64_0178_0179_Combined.dgn

CDI CIVIL DESIGN, INC. WBE / DBE EFFINGHAM, IL LICENSE #184.003222

USER NAME =	DESIGNED - KAS	REVISED -	
	CHECKED - TJZ	REVISED -	
PLOT SCALE =	DRAWN - DWS	REVISED -	
PLOT DATE =	CHECKED - KAS	REVISED -	

STATE OF ILLINOIS
DEPARTMENT OF TRANSPORTATION

JOINT RECONSTRUCTION DETAILS – CONCRETE SUPERSTRUCTURE
S.N. 057-0178 (SB) & 057-0179 (NB)

SHEET 9 OF 13 SHEETS

F.A.I. RTE.	SECTION	COUNTY	TOTAL SHEETS	SHEET NO.
55	(57-1,57-2)BDS	MCLEAN	88	66
		CONTRACT NO. 70D64		
		ILLINOIS	FED. AID PROJECT	

11/29/2021 1:01:28 PM

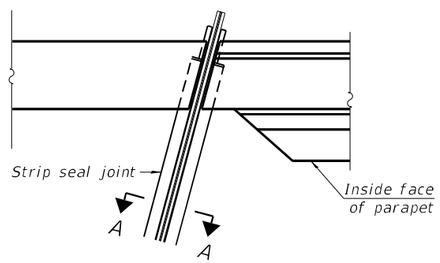

PLAN AT PARAPET

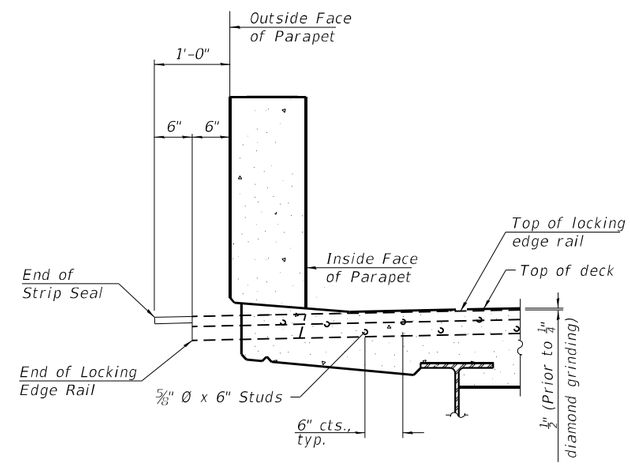

ELEVATION AT PARAPET

Notes:

The strip seal shall be made continuous and shall have a minimum thickness of 1/4". The configuration of the strip seal shall match the configuration of the locking edge rails. Open or "webbed" strip seal gland configurations are not permitted. The gland shall be sized for a maximum rated movement of 4 inches.

The locking edge rails depicted are configured for typical applications and are conceptual only. The actual configuration of the locking edge rails and matching strip seal may vary from manufacturer to manufacturer provided they fit the application and meet the minimum anchorage shown. Flanged edge rails, however, will not be allowed. Locking edge rails may exceed the 4 1/2" maximum depth provided the anchorage system is revised according to the manufacturer's recommendation.

The manufacturer's recommended installation methods shall be followed.

All steel components shall be galvanized after fabrication according to Article 520.03 of the Standard Specifications.

The Maximum space between locking edge rail segments shall be 3/16" and sealed with a suitable sealant; however, any rail joint within 10' measured perpendicular to the face of the curb or parapet shall be welded as shown in the locking edge rail splice detail.

The concrete opening below the strip seal will vary based on the locking edge rail chosen by the Contractor. Deck and parapet lengths shown elsewhere in the plans are dimensioned to the concrete opening, not the joint opening, and are based on the rolled locking edge rail. If the Contractor elects to use a different locking edge rail, dimensional adjustments may be required. One exception to this would be the strip seal joint at the end of the precast bridge approach slab. For these cases the pavement connector length shall be adjusted, not the length of the bridge approach slab.

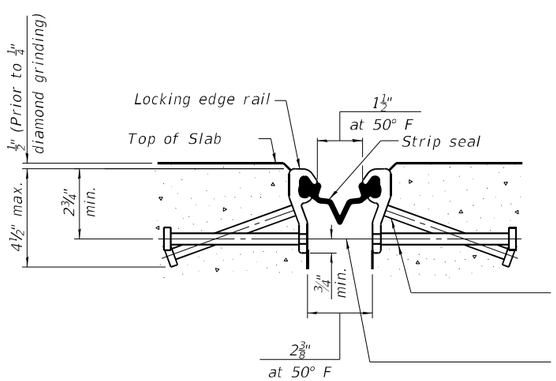

SHOWING ROLLED RAIL JOINT

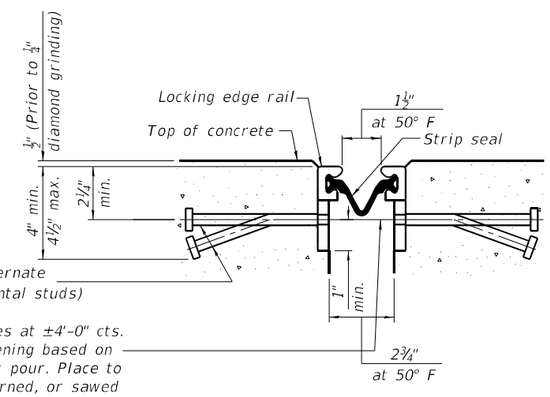

SHOWING WELDED RAIL JOINT

* 5/8" Ø x 6" studs @ 6" cts. (alternate angled/bent studs with horizontal studs)

3/8" ϕ threaded rods in 7/16" ϕ holes at ±4'-0" cts. for holding the proper joint opening based on the temperature during the deck pour. Place to miss studs. All rods shall be burned, or sawed off flush with the plates after concrete is set.

SECTION A-A

* Granular or solid flux filled headed studs conforming to Article 1006.32 of the Std. Specs., automatically end welded.

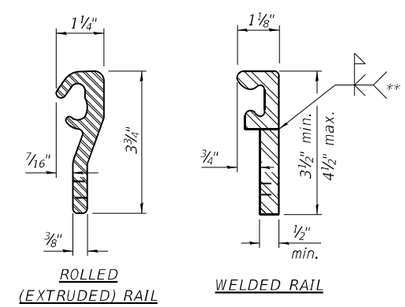

ROLLED (EXTRUDED) RAIL

WELDED RAIL

LOCKING EDGE RAILS

** Back gouge not required if complete joint penetration is verified by mock-up.

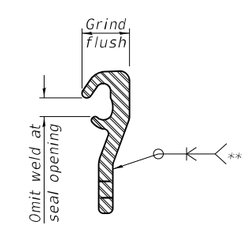

LOCKING EDGE RAIL SPLICE

The inside of the locking edge rail groove shall be free of weld residue. Rolled rail shown, welded rail similar.

BILL OF MATERIAL

Structure	Item	Unit	Total
057-0178	Preformed Joint Strip Seal	Foot	88
057-0179	Preformed Joint Strip Seal	Foot	88

MODEL: Strip Seal
FILE NAME: P:\Effingham\3454 - PTB 189 IDOT D5 VA\Work Order #6\Cadd\Sheet\178\D570D64_0178_0179_Combined.dgn

CDI — CIVIL DESIGN, INC. WBE / DBE — EFFINGHAM, IL — LICENSE #184.003222

USER NAME =	DESIGNED - KAS	REVISED -	
	CHECKED - TJZ	REVISED -	
PLOT SCALE =	DRAWN - DWS	REVISED -	
PLOT DATE =	CHECKED - KAS	REVISED -	

STATE OF ILLINOIS
DEPARTMENT OF TRANSPORTATION

PREFORMED STRIP SEAL DETAILS
S.N. 057-0178 (SB) & S.N. 057-0179 (NB)

SHEET 10 OF 13 SHEETS

F.A.I. RTE.	SECTION	COUNTY	TOTAL SHEETS	SHEET NO.
55	(57-1,57-2)BDS	MCLEAN	88	67

CONTRACT NO. 70D64

ILLINOIS FED. AID PROJECT

10/21/2021 3:14:36 PM

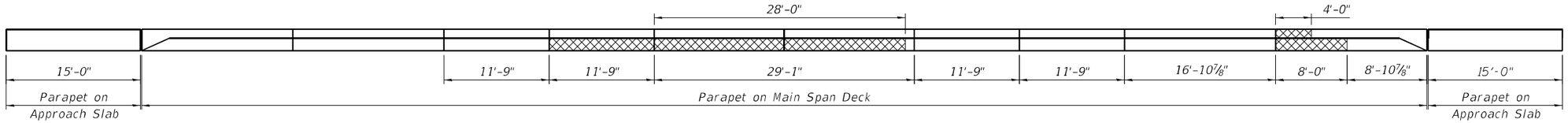

S.N. 057-0178 EAST PARAPET ELEVATION

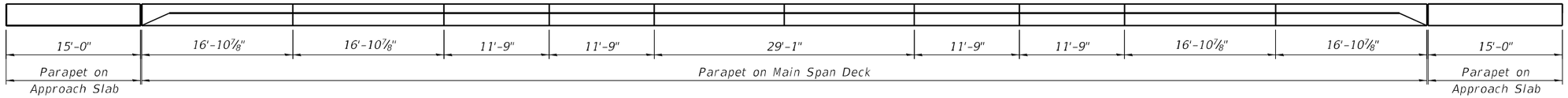

S.N. 057-0178 WEST PARAPET ELEVATION

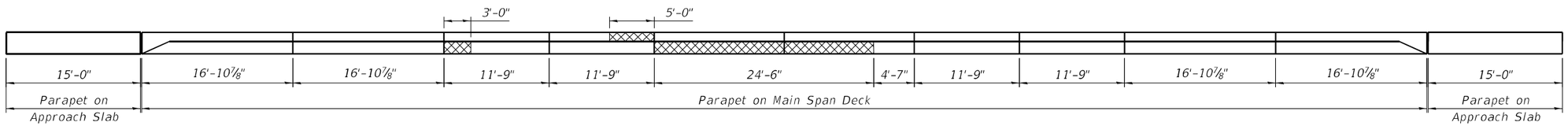

S.N. 057-0179 EAST PARAPET ELEVATION

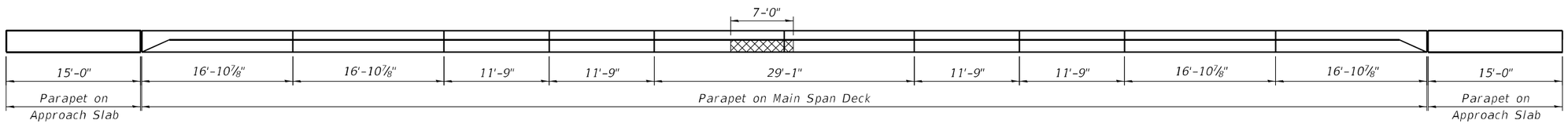

S.N. 057-0179 WEST PARAPET ELEVATION

Structural Repair of Concrete
Depth Equal To or Less than 5"

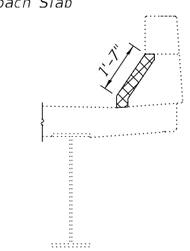

SECTION THRU PARAPET

Showing Typical Removal Limits for Structural Repair of Concrete on Parapets

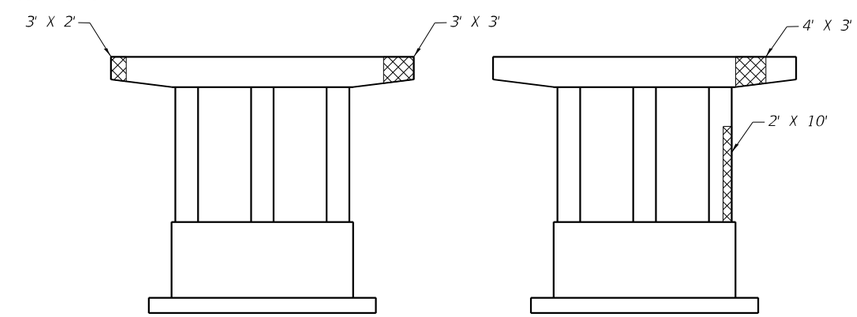

NORTH SIDE

SOUTH SIDE

S.N. 057-0178 NORTH PIER

S.N. 057-0178
TABLE FOR STRUCTURAL REPAIR OF CONCRETE

ABUTMENT CORNER	Repair Area Dimensions				Repair Area Sq. Ft.
	Wingwall		Backwall		
	A	B	C	D	
Northeast	3	4	2	3	18
Southeast	3	3	2	5	19
Northwest	4	5	3	4	32
Southwest	3	3	3	5	24

S.N. 057-0179
TABLE FOR STRUCTURAL REPAIR OF CONCRETE

ABUTMENT CORNER	Repair Area Dimensions				Repair Area Sq. Ft.
	Wingwall		Backwall		
	A	B	C	D	
Northeast	3	4	2	3	18
Southeast	2	3	3	2	12
Northwest	4	5	3	4	32
Southwest	3	4	3	3	21

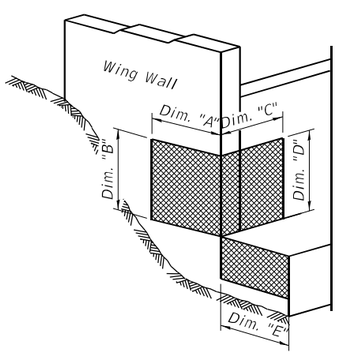

BILL OF MATERIAL

Structure	Item	Unit	Total
057-0178	Structural Repair of Concrete, Depth Equal to or Less than 5"	Sq. Ft.	230
057-0179	Structural Repair of Concrete, Depth Equal to or Less than 5"	Sq. Ft.	147

Note:

See Special Provision for Structural Repair of Concrete.

MODEL: Shallow Repairs
FILE NAME: P:\Effingham\3454 - PTB 189 IDOT D5 VA\Work Order #6\Cadd\Sheet\178\D570D64_0178_0179_Combined.dgn

CIVIL DESIGN, INC.
WBE / DBE
EFFINGHAM, IL
LICENSE #184.003222

USER NAME =	DESIGNED - KAS	REVISED -	
	CHECKED - TJZ	REVISED -	
PLOT SCALE =	DRAWN - DWS	REVISED -	
PLOT DATE =	CHECKED - KAS	REVISED -	

STATE OF ILLINOIS
DEPARTMENT OF TRANSPORTATION

SHALLOW CONCRETE REPAIR PLAN
S.N. 057-0178 (SB) & S.N. 057-0179 (NB)

SHEET 11 OF 13 SHEETS

F.A.I. RTE.	SECTION	COUNTY	TOTAL SHEETS	SHEET NO.
55	(57-1,57-2)BDS	MCLEAN	88	68

CONTRACT NO. 70D64

ILLINOIS FED. AID PROJECT

11/29/2021 1:02:00 PM

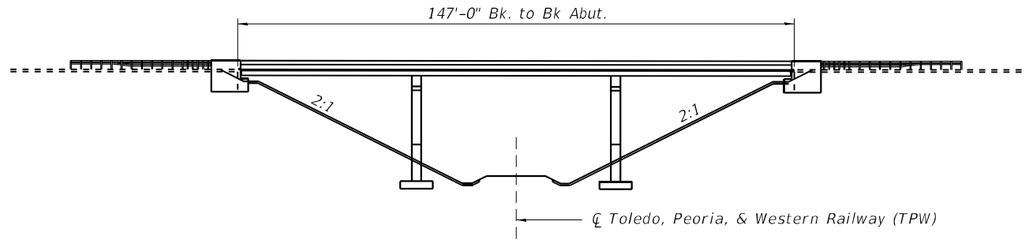

ELEVATION

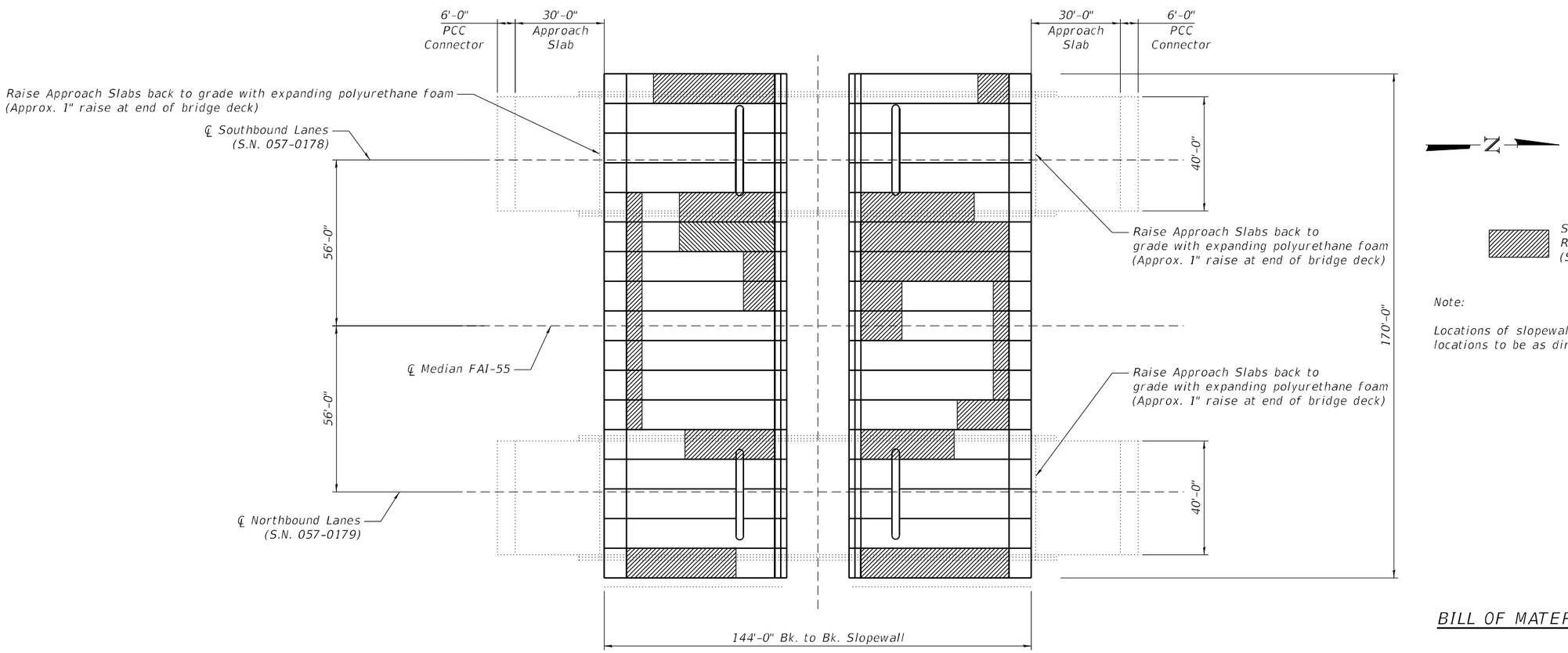

PLAN

Slopewall Breaking & Stone Dumped Riprap, Class A4 (Special)
(See Special Provisions)

Note:

Locations of slopewall repairs are approximate. Actual locations to be as directed by the Engineer in the field.

BILL OF MATERIAL

Structure	Item	Unit	Total
Total	Slopewall Breaking	Sq. Yd.	667
Total	Stone Dumped Riprap, Class A4 (Special)	Sq. Yd.	667
057-0178	Foam, Expanding Polyurethane, High-Density	Pound	12000
057-0179	Foam, Expanding Polyurethane, High-Density	Pound	12000

MODEL: Misc Repairs
FILE NAME: P:\Effingham\3454 - PTB 189 IDOT D5 VA\Work Order #6\Cadd\Sheet\178\D570D64_0178_0179_Combined.dgn

CDI
CIVIL DESIGN, INC.
WBE / DBE
EFFINGHAM, IL
LICENSE #184.003222

USER NAME =	DESIGNED - KAS	REVISED -	
	CHECKED - TJZ	REVISED -	
PLOT SCALE =	DRAWN - DWS	REVISED -	
PLOT DATE =	CHECKED - KAS	REVISED -	

STATE OF ILLINOIS
DEPARTMENT OF TRANSPORTATION

MISCELLANEOUS REPAIRS
S.N. 057-0178 (SB) & S.N. 057-0179 (NB)
SHEET 12 OF 13 SHEETS

F.A.I. RTE.	SECTION	COUNTY	TOTAL SHEETS	SHEET NO.
55	(57-1,57-2)BDS	MCLEAN	88	69

CONTRACT NO. 70D64
ILLINOIS FED. AID PROJECT

11/29/2021 1:02:36 PM

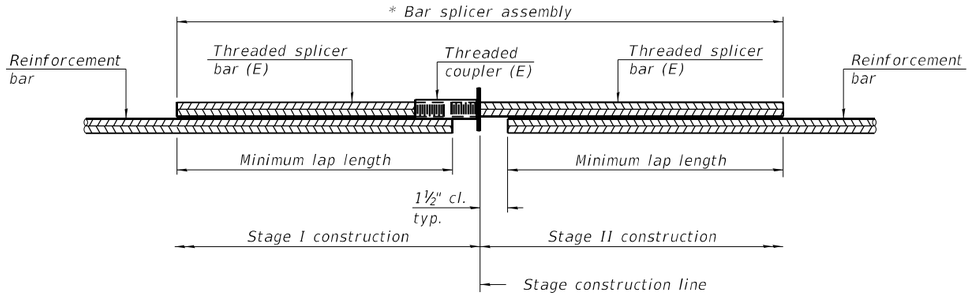

STANDARD BAR SPLICER ASSEMBLY PLAN

(All components shall be provided from one supplier)

Threaded splicer bar length = min. lap length + 1½" + thread length

* Epoxy not required on Bar Splicer Assembly components used in conjunction with black bars.

Structure	Location	Bar size	No. assemblies required	Minimum lap length
057-0178	Deck End	#5	8	3'-6"
057-0179	Deck End	#5	8	3'-6"

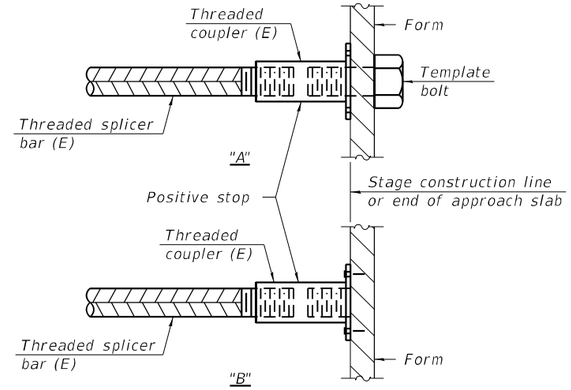

INSTALLATION AND SETTING METHODS

"A" : Set bar splicer assembly by means of a template bolt.
"B" : Set bar splicer assembly by nailing to wood forms or cementing to steel forms.
(E) : Indicates epoxy coating.

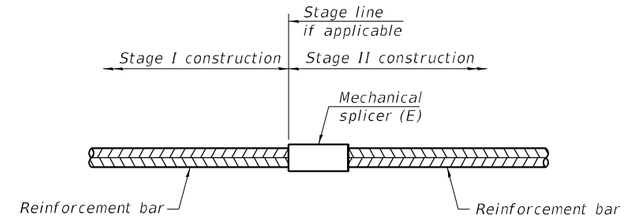

STANDARD MECHANICAL SPLICER

Location	Bar size	No. assemblies required

Notes:
Splicer bars shall be deformed with threaded ends and have a minimum 60 ksi yield strength.
All reinforcement shall be lapped and tied to the splicer bars.
Bar splicer assemblies shall be epoxy coated according to the requirements for reinforcement bars. See Section 508 of the Standard Specifications.
See approved list of bar splicer assemblies and mechanical splicers for alternatives.

BSD-1 1-1-2020

MODEL: BSD
FILE NAME: P:\Effingham\3454 - PTB 189 IDOT D5 VA\Work Order #6\Cadd\Sheet\178\D570D64_0178_0179_Combined.dgn

CDI CIVIL DESIGN, INC. WBE / DBE EFFINGHAM, IL LICENSE #184.003222

USER NAME =	DESIGNED - KAS	REVISED -	
	CHECKED - TJZ	REVISED -	
PLOT SCALE =	DRAWN - DWS	REVISED -	
PLOT DATE =	CHECKED - KAS	REVISED -	

STATE OF ILLINOIS
DEPARTMENT OF TRANSPORTATION

BAR SPLICER ASSEMBLY AND MECHANICAL SPLICER DETAILS
S.N. 057-0178 (SB) & S.N. 057-0179 (NB)
SHEET 13 OF 13 SHEETS

F.A.I. RTE.	SECTION	COUNTY	TOTAL SHEETS	SHEET NO.
55	(57-1,57-2)BDS	MCLEAN	88	70

CONTRACT NO. 70D64
ILLINOIS FED. AID PROJECT

11/29/2021 1:03:04 PM

Structure 057-0182 was originally constructed in 1973 as FAI 55 over Turkey Creek, Contract 29112, Section 57-2B-2 at Station 711+75.00 in McLean County. In 1998, the structure was reconstructed with Contract 86804, Section (57-2B-2)I. The concrete hatch block was removed and the guardsteel on the approach pavement side was replaced. Existing preformed expansion joint sealer was replaced with silicone joint sealer. Then in 2003, the structure was repaired with Contract 66107, Section (57-1,57-2)RS. The bituminous overlay and waterproofing were removed and the deck was overlaid with 3" of microsilica concrete. The expansion joint seal was replaced at both abutments. Cracks and areas of delamination at the abutments and piers were repaired. Drains within 10' of piers and abutments were plugged and others were extended. Gaps between slopewall and abutment were filled in with CLSM. Loose concrete on underside of deck at the drains was removed and repaired. The approach slabs were removed and replaced. Steel was painted in 2009. The superstructure consists of six 36" wide flange steel plate girders supporting a nominal 8" RC deck with a 3" microsilica concrete overlay. The superstructure is supported by two solid straight stem concrete piers with spread footings on concrete piles and stub abutments on concrete piles. The structure has an overall length of 181'-8" from back to back of abutment. The deck has an out to out width of 42'-0", and a deck (clear area) width of 40'-0" from face to face of parapet and rail. The structure was built on an 18° left-forward skew.

Structure 057-0183 was originally constructed in 1973 as FAI 55 over Turkey Creek, Contract 29112, Section 57-2B-2 at Station 711+75.00 in McLean County. In 2003, the structure was repaired with Contract 66107, Section (57-1,57-2)RS. The bituminous overlay and waterproofing were removed and the deck was overlaid with 3" of microsilica concrete. The west expansion joint was replaced and the east expansion joint seal was replaced. Cracks and areas of delamination at the abutments and piers were repaired. Drains within 10' of piers and abutments were plugged and others were extended. Gaps between slopewall and abutment were filled in with CLSM. Loose concrete on underside of deck at the drains was removed and repaired. The approach slabs were removed and replaced. Steel was painted in 2009. The superstructure consists of six 36" wide flange steel plate girders supporting a nominal 8" RC deck with a 3" microsilica concrete overlay. The superstructure is supported by two solid straight stem concrete piers with spread footings on concrete piles and stub abutments on concrete piles. The structure has an overall length of 181'-8" from back to back of abutment. The deck has an out to out width of 42'-0", and a deck (clear area) width of 40'-0" from face to face of parapet and rail. The structure was built on an 18° left-forward skew.

DESIGN STRESSES
FIELD UNITS

New Construction
f'c = 4,000 psi
fy = 60,000 psi (Reinforcement)

Existing Structure
fc = 1,200 psi (Deck Slab)
fc = 1,400 psi (Curb, Parapet, Sub)
fs = 20,000 psi (Reinforcement)
fs = 20,000 psi (Structural Steel)

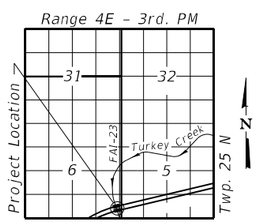

LOCATION SKETCH

Note:
See Sheet 2 of 13 for Proposed Work, Bill of Material, and General Notes.

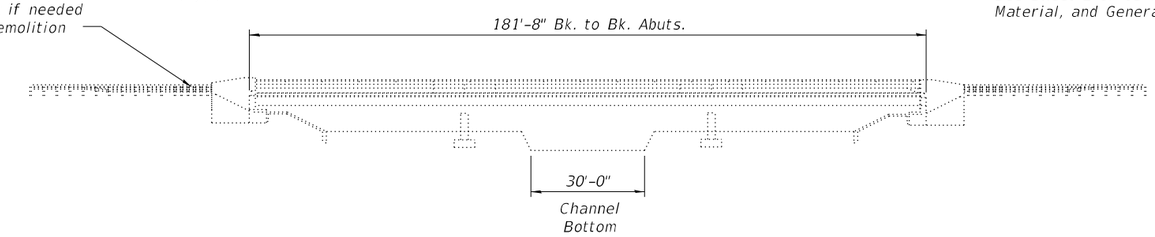

ELEVATION

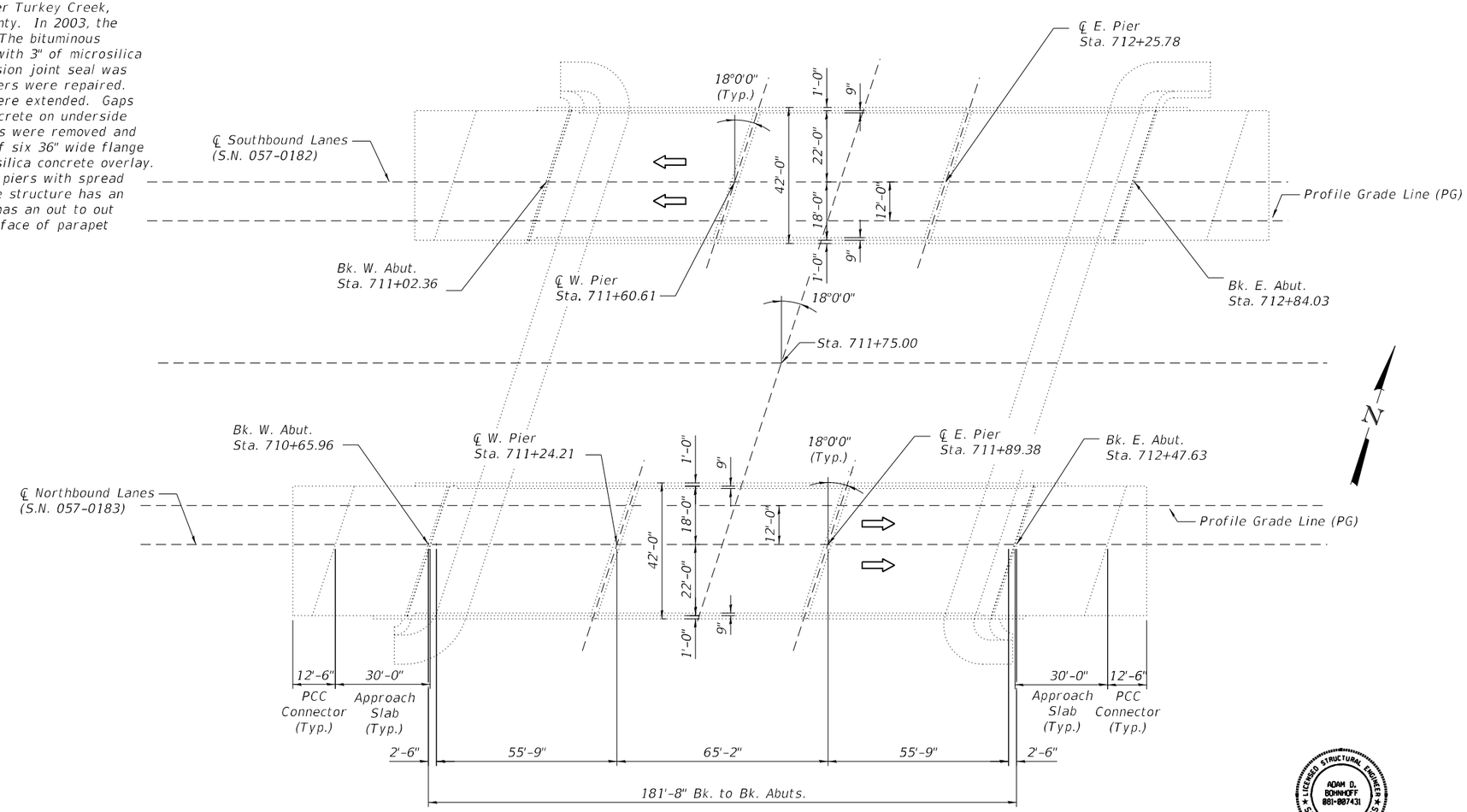

PLAN

LICENSED STRUCTURAL ENGINEER
ADAM D. BOHNHOFF
081-007431
STATE OF ILLINOIS

Adam Bohnhoff 10-21-2021
Adam D. Bohnhoff Date
Licensed Structural Engineer
State of Illinois No. 081-007431
Expires 11-30-2022

MODEL: GPF
FILE NAME: P:\Effingham\3454 - PTB 189 IDOT D5 V-V\Work Order #6\Cadd\Sheet\183 & 182\D570D64_0182_0183_Combined.dgn

CDI CIVIL DESIGN, INC. WBE / DBE EFFINGHAM, IL LICENSE #184.003222

USER NAME =	DESIGNED - KAS	REVISED -	
	CHECKED - TJZ	REVISED -	
PLOT SCALE =	DRAWN - DWS	REVISED -	
PLOT DATE =	CHECKED - KAS	REVISED -	

STATE OF ILLINOIS
DEPARTMENT OF TRANSPORTATION

GENERAL PLAN AND ELEVATION
S.N. 057-0182 (SB) & S.N. 057-0183 (NB)
SHEET 1 OF 13 SHEETS

F.A.I. RTE.	SECTION	COUNTY	TOTAL SHEETS	SHEET NO.
55	(57-1,57-2)BDS	MCLEAN	88	71
		CONTRACT NO. 70D64		
		ILLINOIS	FED. AID PROJECT	

11/29/2021 1:14:54 PM

TOTAL BILL OF MATERIAL SN 057-0182 & 057-0183

Item	Unit	Total
Protective Coat	Sq. Yd.	2600
Concrete Removal	Cu. Yd.	40.2
Floor Drains	Each	40
Concrete Superstructure	Cu. Yd.	40.2
Furnishing and Erecting Structural Steel	Pound	6060
Stud Shear Connectors	Each	360
Reinforcement Bars, Epoxy Coated	Pound	1560
Bar Splicers	Each	32
Preformed Joint Strip Seal	Foot	184
Polymer Modified Portland Cement Mortar	Sq. Ft.	1376
Bridge Deck Grooving (Longitudinal)	Sq. Yd.	1404
Bridge Deck Latex Concrete Overlay, 2¼"	Sq. Yd.	738
Bridge Deck Latex Concrete Overlay, 3¾"	Sq. Yd.	1434
Bridge Deck Scarification, 2"	Sq. Yd.	738
Bridge Deck Scarification, 3½"	Sq. Yd.	1434
Structural Repair of Concrete (Depth = or < 5 Inches)	Sq. Ft.	70
Deck Slab Repair (Full Depth, Type I)	Sq. Yd.	60
Diamond Grinding (Bridge Section)	Sq. Yd.	2018
Preformed Joint Seal, 1"	Foot	170
Structural Steel Removal	Pound	6060

INDEX OF SHEETS

PROPOSED WORK

1. Perform Bridge Deck Scarification on Bridge Deck, Approach Slabs, and PCC Connectors.
2. Partial Removal of Deck Ends and Parapets.
3. Replace Diaphragms at Beam Ends at Abutments.
4. Removal of Existing Joints.
5. Perform Full-Depth Patching and Replacement of Approach Slab Sections.
6. Perform Substructure Repairs.
7. Place New Floor Drains and Perform Polymer Modified Portland Cement Mortar Repair.
8. Pour Deck Ends.
9. Insert Rubber Strip Seal into Locking Edge Rails.
10. Replace Joints at Approach Ends.
11. Pour Parapets.
12. Place Latex Concrete Overlay on Bridge Deck, Approach Slabs, and PCC Connectors.
13. Perform Diamond Grinding and Longitudinal Bridge Deck Grooving.
14. Apply Protective Coat

GENERAL NOTES

Plan dimensions and details relative to the existing structure have been taken from existing plans and are subject to nominal construction variations. It shall be the Contractor's responsibility to verify such dimensions and details in the field and make the necessary approved adjustments prior to construction or ordering of materials. Such variations shall not be cause for additional compensation for a change in the scope of work. However, the Contractor will be paid for the quantity actually furnished at the unit price for the work.

Reinforcement bars designated (E) shall be epoxy coated.

Prior to pouring the new concrete deck, all heavy or loose rust, loose mill scale, and other loose or potentially detrimental foreign material shall be removed from the surfaces in contact with concrete. Tightly adhered paint may remain unless otherwise noted. Removal shall be accomplished by methods that will not damage the steel and the cost will be included in the pay item covering removal of the existing concrete.

Existing structural steel that will be in contact with new structural steel shall be cleaned and painted prior to erection as required by the Special Provision "Cleaning and Painting Contact Surface Areas of Existing Steel Structures".

Existing reinforcement bars extending into the removal area shall be cleaned, straightened and incorporated into the new construction. Any reinforcement bars that are damaged during concrete removal shall be replaced with approved bar splicer or anchorage system. Cost included with Concrete Removal.

Joint openings shall be adjusted according to Article 520.04 of the Std. Specs. when the deck is poured at an ambient temperature other than 50° F.

Up to ¼" may be ground off the bridge deck and bridge approach slabs through Diamond Grinding.

Expansion joints shall be fabricated and installed according to the manufacturer's recommendations and as approved by the Engineer.

Expansion joints shall be fabricated to conform to the existing cross slopes of the bridge.

Protective Coat shall be applied from end to end of approaches to entire deck surface and along the vertical faces of the parapets.

Synthetic fibers shall be included in the bridge deck concrete overlay specified. See Special Provisions.

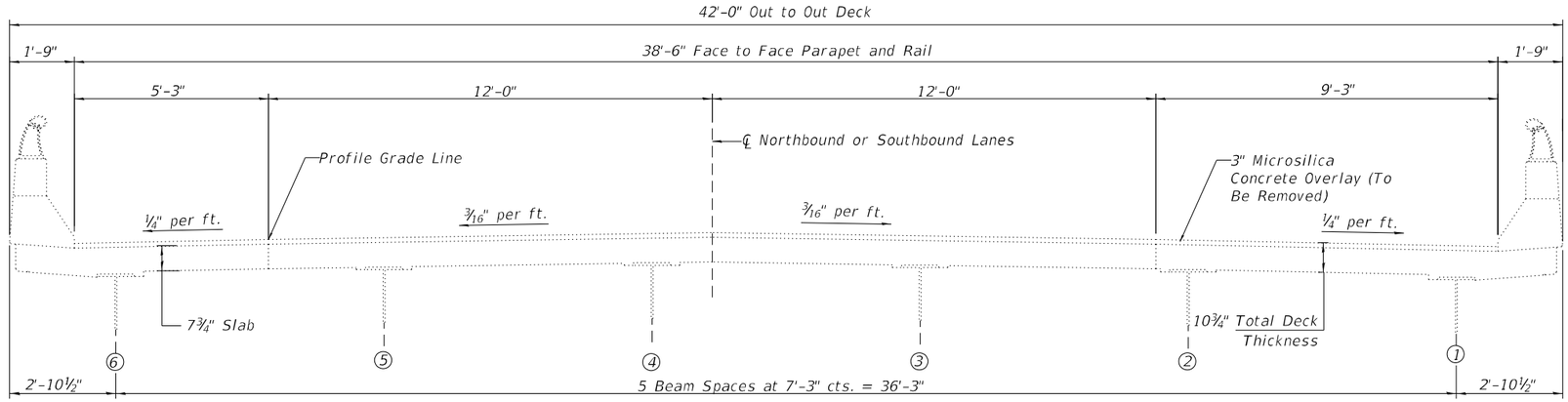

EXISTING CROSS SECTION

(S.N. 057-0182 Looking West)
(S.N. 057-0183 Looking East)

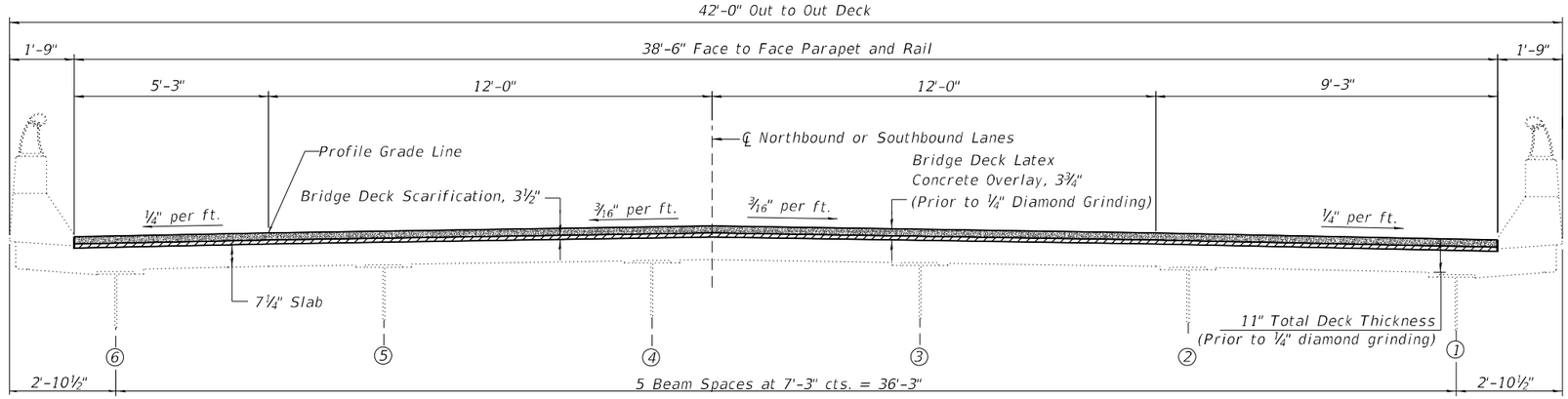

PROPOSED CROSS SECTION

(S.N. 057-0182 Looking West)
(S.N. 057-0183 Looking East)

MODEL: Cross Sections
FILE NAME: P:\Effingham\3454 - PTB 189 IDOT D5 VA\Work Order #6\Cadd\Sheet\183 & 182\D570D64_0182_0183_Combined.dgn

CIVIL DESIGN, INC.
WBE / DBE
EFFINGHAM, IL
LICENSE #184.003222

USER NAME =	DESIGNED - KAS	REVISED -	
	CHECKED - TJZ	REVISED -	
PLOT SCALE =	DRAWN - DWS	REVISED -	
PLOT DATE =	CHECKED - KAS	REVISED -	

STATE OF ILLINOIS
DEPARTMENT OF TRANSPORTATION

EXISTING AND PROPOSED TYPICAL CROSS SECTIONS
S.N. 057-0182 (SB) & S.N. 057-0183 (NB)

SHEET 3 OF 13 SHEETS

F.A.I. RTE.	SECTION	COUNTY	TOTAL SHEETS	SHEET NO.
55	(57-1,57-2)BDS	MCLEAN	88	73
		CONTRACT NO. 70D64		
		ILLINOIS	FED. AID PROJECT	

10/21/2021 3:06:34 PM

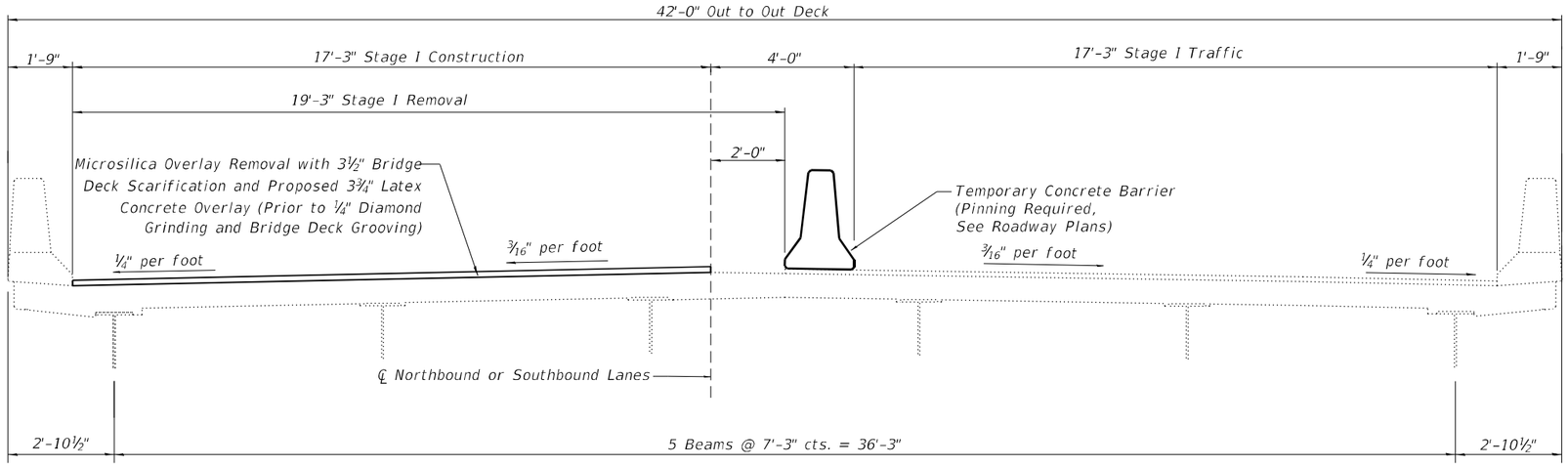

STAGE I CONSTRUCTION DETAILS

(S.N. 057-0182 Looking West)
(S.N. 057-0183 Looking East)

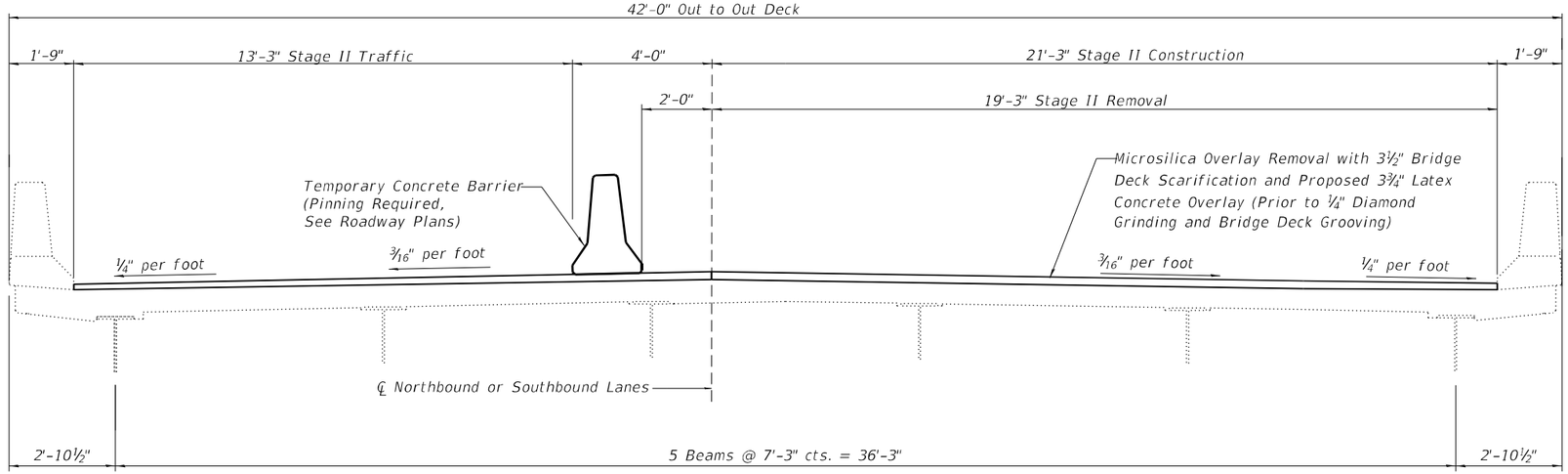

STAGE II CONSTRUCTION DETAILS

(S.N. 057-0182 Looking West)
(S.N. 057-0183 Looking East)

MODEL: Stage Construction
FILE NAME: P:\Effingham\3454 - PTB 189 IDOT D5 VAV\Work Order #6\Cadd\Sheet\183 & 182\D570D64_0182_0183_Combined.dgn
10/21/2021 3:06:35 PM

CDI CIVIL DESIGN, INC. WBE / DBE EFFINGHAM, IL LICENSE #184.003222

USER NAME =	DESIGNED - KAS	REVISED -	STATE OF ILLINOIS DEPARTMENT OF TRANSPORTATION	STAGE CONSTRUCTION DETAILS S.N. 057-0182 (SB) & S.N. 057-0183 (NB)	
	CHECKED - TJZ	REVISED -			
PLOT SCALE =	DRAWN - DWS	REVISED -			
PLOT DATE =	CHECKED - KAS	REVISED -		SHEET 4 OF 13 SHEETS	

F.A.I. RTE.	SECTION	COUNTY	TOTAL SHEETS	SHEET NO.
55	(57-1,57-2)BDS	MCLEAN	88	74
		CONTRACT NO. 70D64		
		ILLINOIS	FED. AID PROJECT	

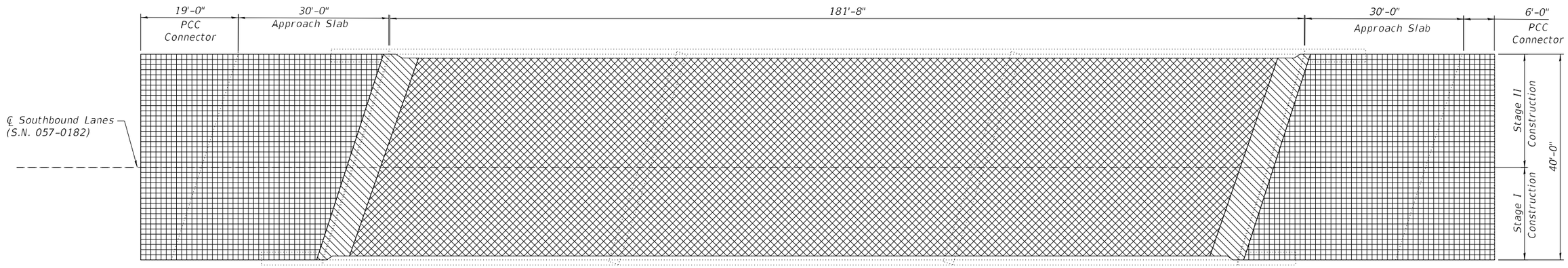

PLAN

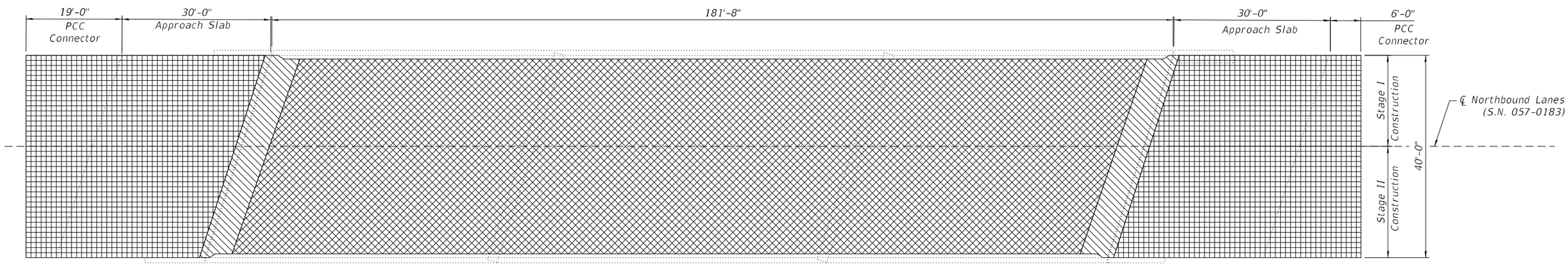

PLAN

Bridge Deck Scarification, 2", Bridge Deck Latex Concrete Overlay, 2¼", Diamond Grinding, ¼" and Bridge Deck Grooving (Longitudinal)

Bridge Deck Scarification, 3½", Bridge Latex Concrete Overlay, 3¾", Diamond Grinding, ¼" and Bridge Deck Grooving (Longitudinal)

Diamond Grinding, ¼" and Bridge Deck Grooving (Longitudinal)

BILL OF MATERIAL

(Deck & Approach)

Structure	Item	Unit	Total
057-0182	Bridge Latex Concrete Overlay, 3¾"	Sq. Yd.	717
	Bridge Latex Concrete Overlay, 2¼"	Sq. Yd.	369
	Bridge Deck Scarification, 3½"	Sq. Yd.	717
	Bridge Deck Scarification, 2"	Sq. Yd.	369
	Bridge Deck Grooving (Longitudinal)	Sq. Yd.	702
	Diamond Grinding (Bridge Section)	Sq. Yd.	1009
057-0183	Bridge Latex Concrete Overlay, 3¾"	Sq. Yd.	717
	Bridge Latex Concrete Overlay, 2¼"	Sq. Yd.	369
	Bridge Deck Scarification, 3½"	Sq. Yd.	717
	Bridge Deck Scarification, 2"	Sq. Yd.	369
	Bridge Deck Grooving (Longitudinal)	Sq. Yd.	702
	Diamond Grinding (Bridge Section)	Sq. Yd.	1009

MODEL: Wearing Surface
FILE NAME: P:\Effingham\3454 - PTB 189 IDOT D5 VAV\Work Order #6\Cadd\Sheet\183 & 182\D570D64_0182_0183_Combined.dgn

CDI CIVIL DESIGN, INC. WBE / DBE EFFINGHAM, IL LICENSE #184.003222

USER NAME =	DESIGNED - KAS	REVISED -	
	CHECKED - TJZ	REVISED -	
PLOT SCALE =	DRAWN - DWS	REVISED -	
PLOT DATE =	CHECKED - KAS	REVISED -	

STATE OF ILLINOIS
DEPARTMENT OF TRANSPORTATION

WEARING SURFACE PLAN
S.N. 057-0182 (SB) & S.N. 057-0183 (NB)

SHEET 5 OF 13 SHEETS

F.A.I. RTE.	SECTION	COUNTY	TOTAL SHEETS	SHEET NO.
55	(57-1,57-2)BDS	MCLEAN	88	75
		CONTRACT NO. 70D64		
		ILLINOIS	FED. AID PROJECT	

10/21/2021 3:06:35 PM

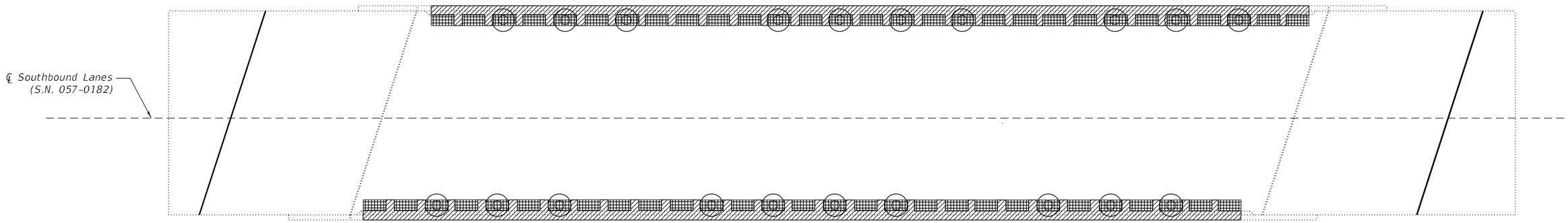

PLAN

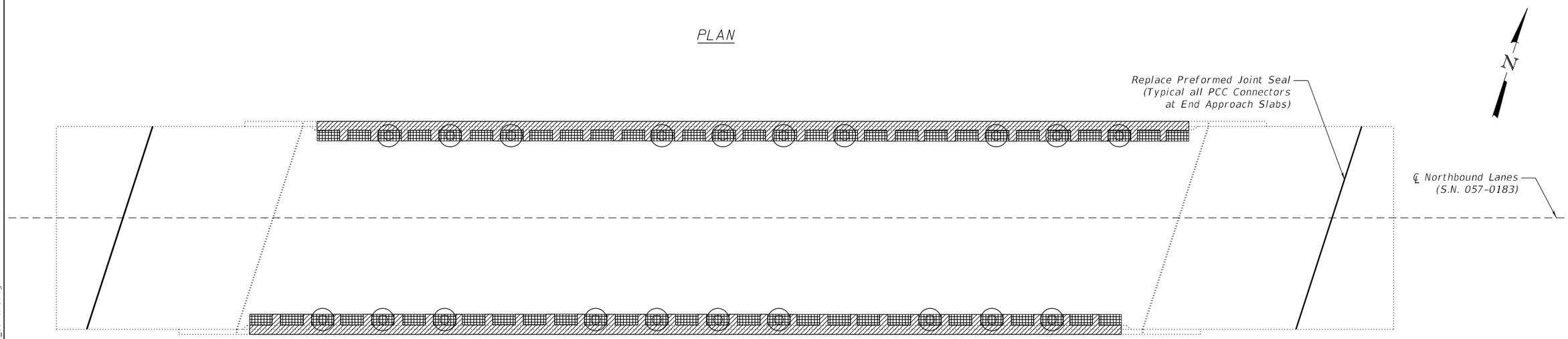

PLAN

BILL OF MATERIAL

Structure	Item	Unit	Total
057-0182	Deck Slab Repair (Full Depth, Type I)	Sq. Yd.	30
057-0182	Polymer Modified Portland Cement Mortar	Sq. Ft.	688
057-0182	Preformed Joint Seal, 1"	Foot	85
057-0183	Deck Slab Repair (Full Depth, Type I)	Sq. Yd.	30
057-0183	Polymer Modified Portland Cement Mortar	Sq. Ft.	688
057-0183	Preformed Joint Seal, 1"	Foot	85

LEGEND

- Proposed floor drain location
- Deck Slab Repair (Full Depth, Type I) at all Drain Locations. All repair areas are 2'-0" x 1'-1", unless otherwise noted.
- Polymer Modified Portland Cement Mortar

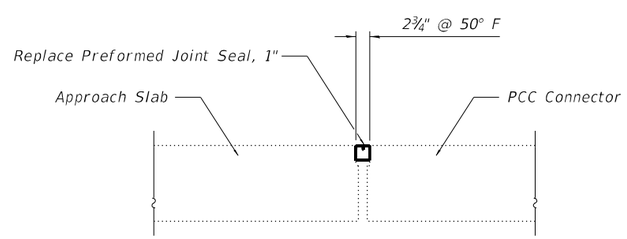

PREFORMED JOINT REPLACEMENT DETAIL

(S.N. 057-0182 East & West Approach)
(S.N. 057-0183 East & West Approach)

NOTES:

Patch sizes shown represent conditions at the time the plans were completed. An Estimated 2% of the Deck Area has been included should additional Deck Slab Repair (Full Depth, Type I) be required after Bridge Deck Scarification.

The actual sizes and locations of patching shall be determined by the Resident Engineer after removal of the wearing surface, before patching operations begin. The Engineer Shall show the actual locations of the deck repairs on this sheet.

The existing drains and extensions shall be removed. Cost included with Deck Slab Repair (Full Depth, Type I).

Extreme care must be used when removing concrete near the top flange of the beams. The Contractor is responsible for any damage to the beams.

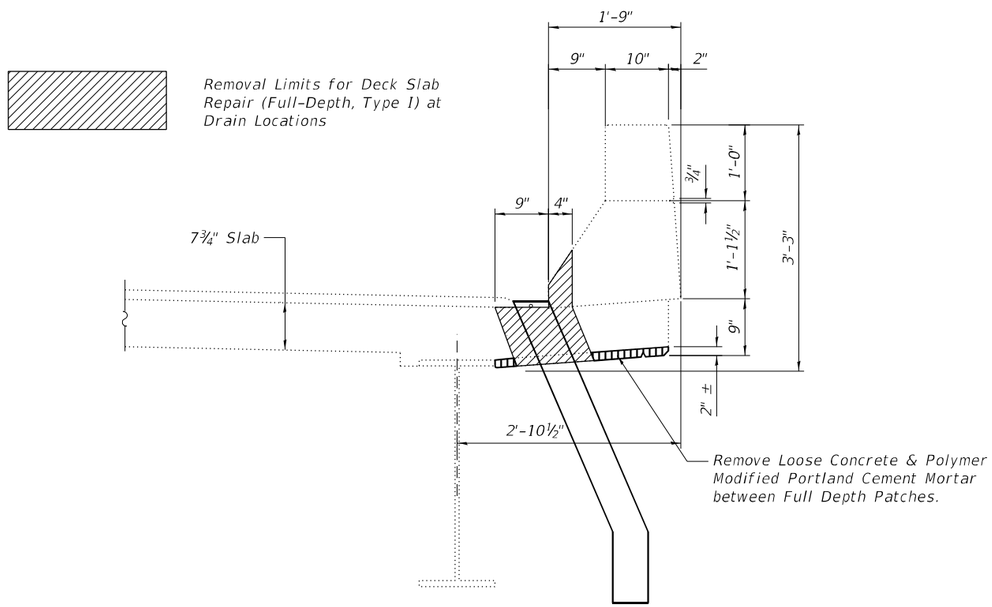

TYPICAL REMOVAL LIMITS

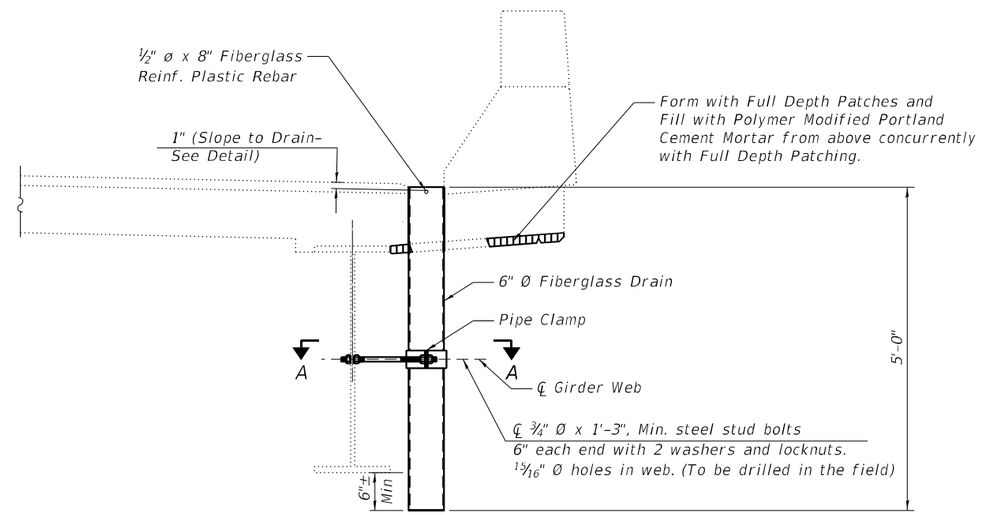

TYPICAL DRAIN REPLACEMENT

Notes:

All dimensions shall be field verified by the Contractor prior to ordering of materials.

Cost of removal of existing drains and extensions is included in Deck Slab Repair (Full Depth, Type I)

Fiberglass pipe shall conform to ASTM 02996, with short-time rupture strength hoop tensile stress of 30,000 psi minimum.

The exterior surfaces of the floor drains shall be painted according to Article 506 with the finish coat as specified.

The exterior surfaces of the drains shall be cleaned according to the Society of Protective Coating Spec SSPC-SPI prior to painting.

The clamping device shall be galvanized according to AASHTO M 232. Cost of clamping device included with Floor Drains.

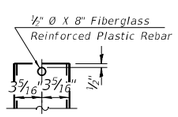

FIBERGLASS PIPE

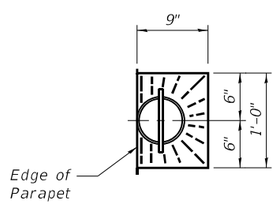

TOP PLAN

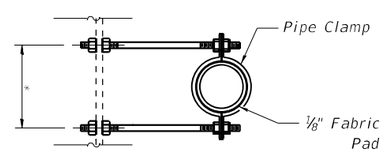

SECTION A-A

* Dimension as required by Pipe Clamp

BILL OF MATERIAL

Structure	Item	Unit	Total
057-0182	Floor Drains	Each	20
057-0183	Floor Drains	Each	20

MODEL: Floor Drain
FILE NAME: P:\Effingham\3454 - PTB 189 IDOT D5 VA\Work Order #6\Cadd\Sheet\183 & 182\D570D64_0182_0183_Combined.dgn

CIVIL DESIGN, INC. WBE / DBE
EFFINGHAM, IL
LICENSE #184.003222

USER NAME =	DESIGNED - KAS	REVISED -	
	CHECKED - TJZ	REVISED -	
PLOT SCALE =	DRAWN - DWS	REVISED -	
PLOT DATE =	CHECKED - KAS	REVISED -	

STATE OF ILLINOIS
DEPARTMENT OF TRANSPORTATION

FLOOR DRAIN DETAILS
S.N. 057-0182 (SB) & S.N. 057-0183 (NB)

SHEET 7 OF 13 SHEETS

F.A.I. RTE.	SECTION	COUNTY	TOTAL SHEETS	SHEET NO.
55	(57-1,57-2)BDS	MCLEAN	88	77

CONTRACT NO. 70D64

ILLINOIS FED. AID PROJECT

11/29/2021 1:16:21 PM

Note: S.N. 057-0182 shown, S.N. 057-0183 similar.

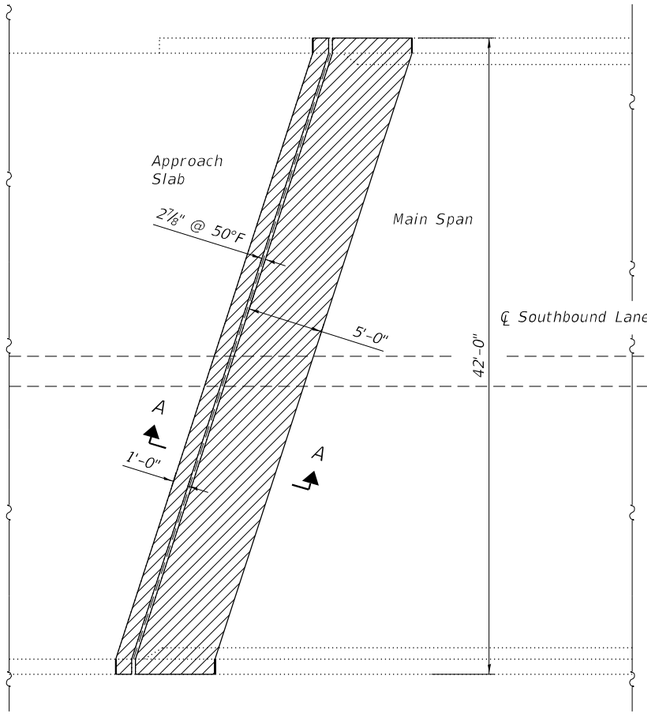

WEST ABUTMENT

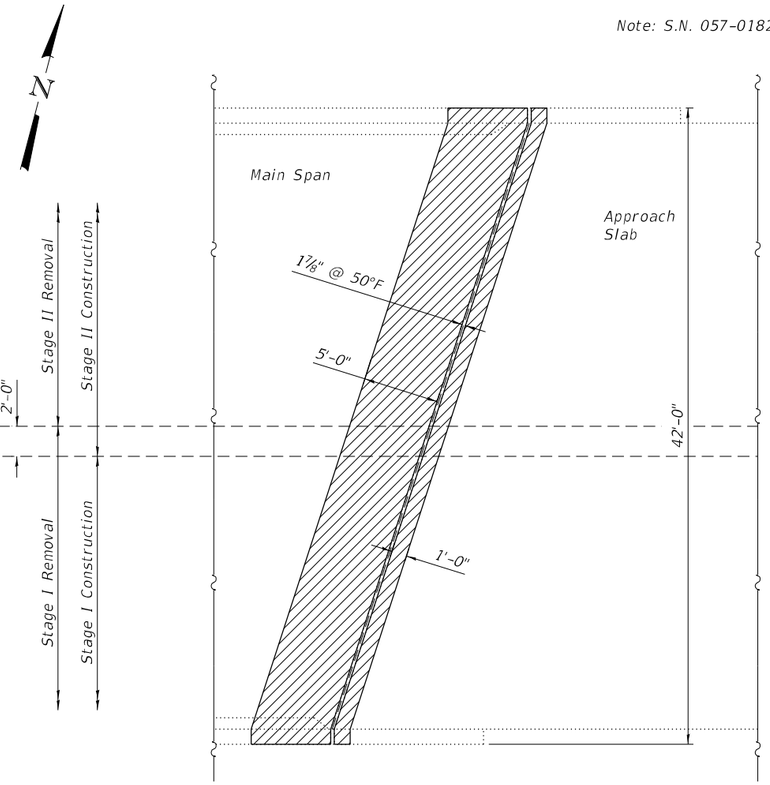

PLAN

EAST ABUTMENT

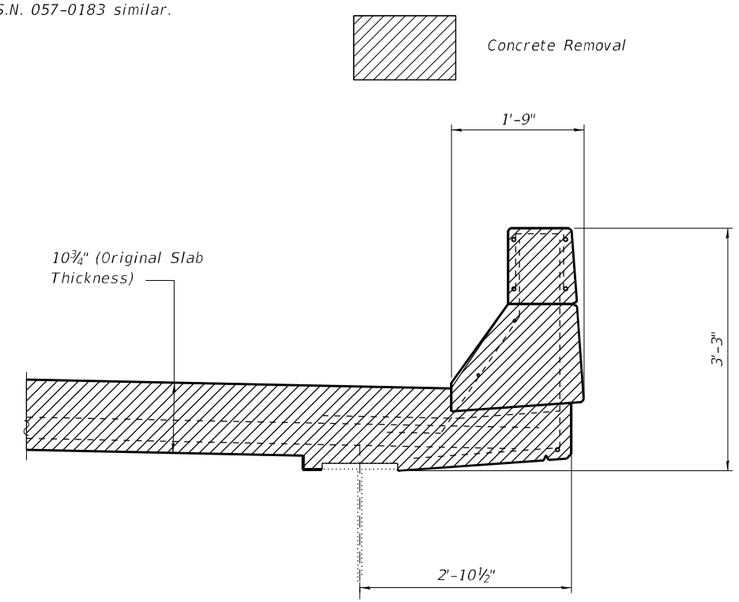

Note: All existing reinforcement to remain in place.

SECTION AT PARAPET

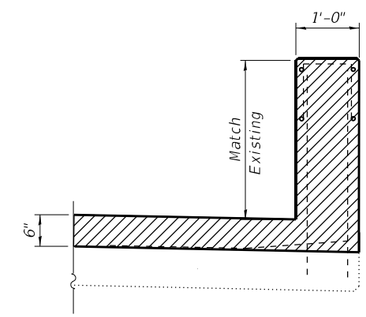

SECTION AT HATCH BLOCK/WING

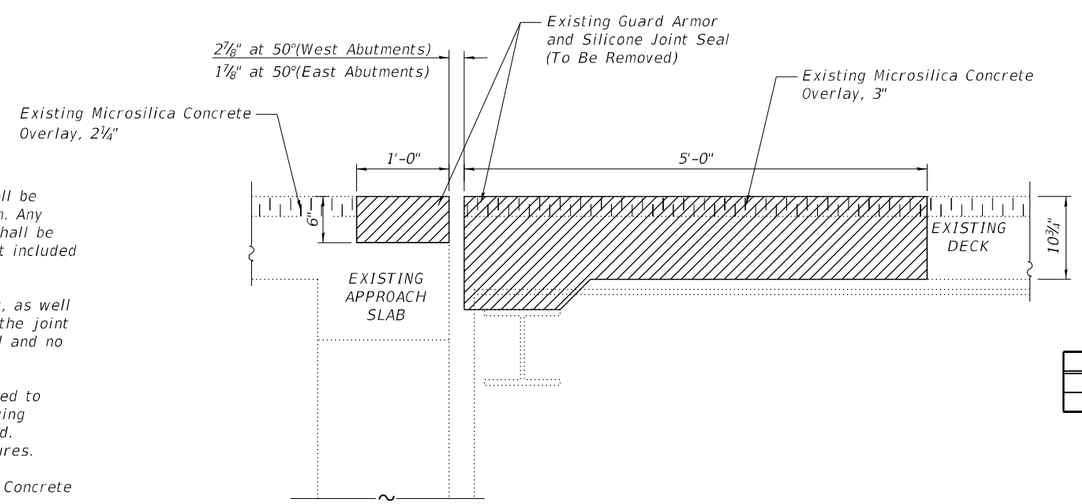

SECTION A-A

NOTES:

Existing reinforcement bars extending into the removal area shall be cleaned, straightened and incorporated into the New Construction. Any reinforcement bars that are damaged during Concrete Removal shall be replaced with an approved bar splicer or anchorage system. Cost included with Concrete Removal.

The existing expansion joint system shall be removed completely, as well as any foreign material that has accumulated or been placed in the joint openings. The cost for this work is included in Concrete Removal and no addtitional compensation will be allowed.

The handrail attached to the top of the parapets shall be unbolted to allow for the removal and placement of the parapet ends. Following completion of the parapet ends, the handrail shall be re-attached. The cost of this work shall be included in Concrete Superstructures.

All existing deck tie downs shall be removed. Cost included with Concrete Removal.

BILL OF MATERIAL

Structure	Item	Unit	Total
057-0182	Concrete Removal	Cu. Yd.	20.1
057-0183	Concrete Removal	Cu. Yd.	20.1

MODEL: Removal 1
FILE NAME: P:\Effingham\3454 - PTB 189 IDOT D5 V4\Work Order #6\Cadd\Sheet\183 & 182\D570D64_0182_0183_Combined.dgn
11/29/2021 1:16:45 PM

CDI CIVIL DESIGN, INC. WBE / DBE EFFINGHAM, IL LICENSE #184.003222

USER NAME =	DESIGNED - KAS	REVISED -	
	CHECKED - TJZ	REVISED -	
PLOT SCALE =	DRAWN - DWS	REVISED -	
PLOT DATE =	CHECKED - KAS	REVISED -	

STATE OF ILLINOIS
DEPARTMENT OF TRANSPORTATION

SUPERSTRUCTURE PLAN – CONCRETE REMOVAL DETAILS
S.N. 057-0182 (SB) & S.N. 057-0183 (NB)

SHEET 8 OF 13 SHEETS

F.A.I. RTE.	SECTION	COUNTY	TOTAL SHEETS	SHEET NO.
55	(57-1,57-2)BDS	MCLEAN	88	78

CONTRACT NO. 70D64

ILLINOIS FED. AID PROJECT

Note: S.N. 057-0182 shown, S.N. 057-0183 similar.

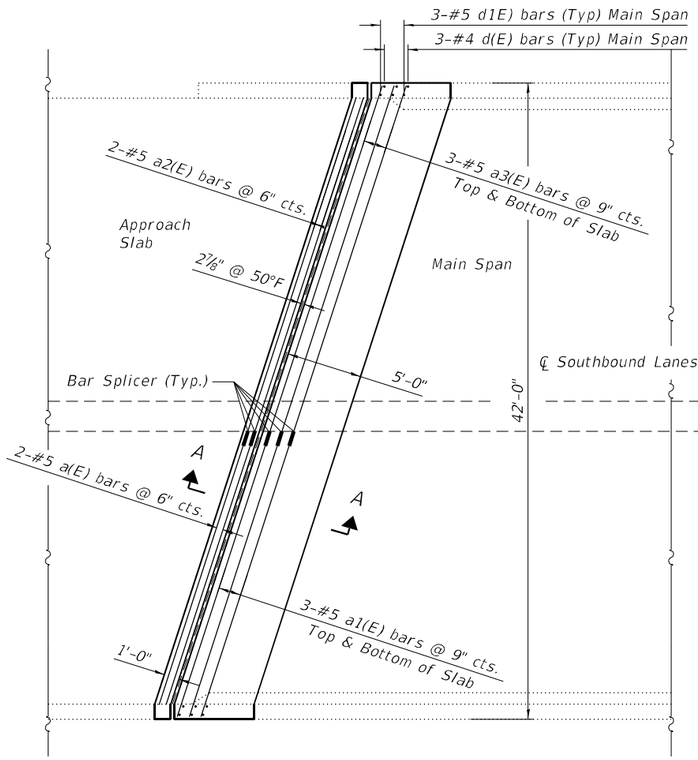

WEST ABUTMENT

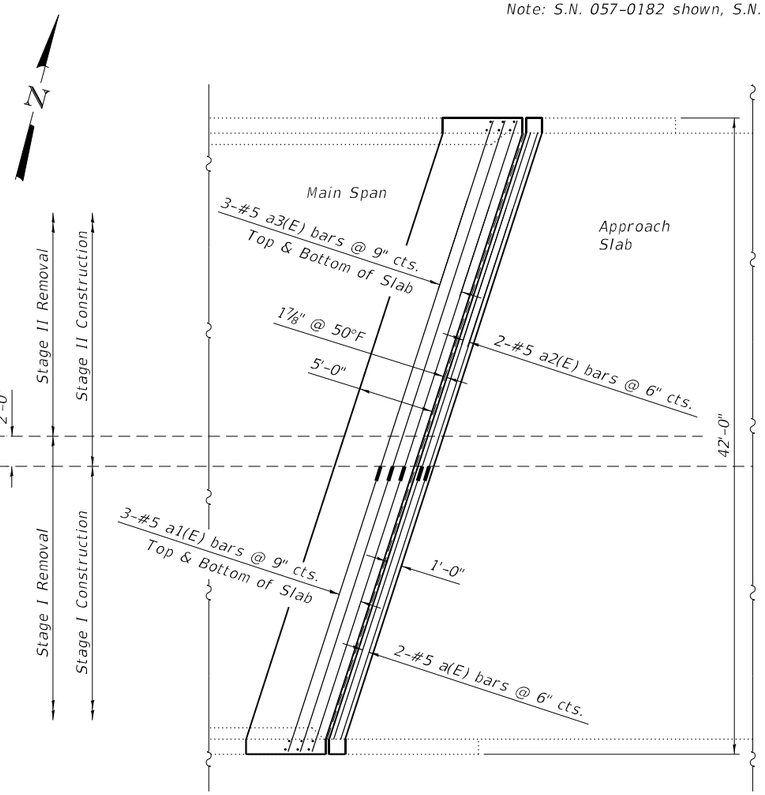

EAST ABUTMENT

PLAN

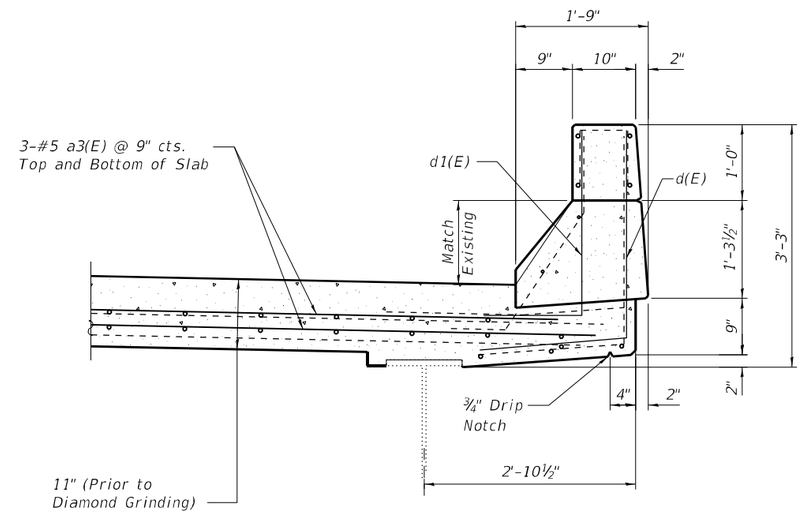

SECTION AT PARAPET

(Main Span)

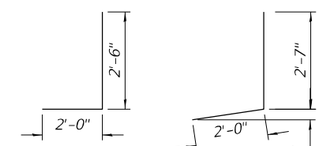

d1(E) bar

d(E) bar

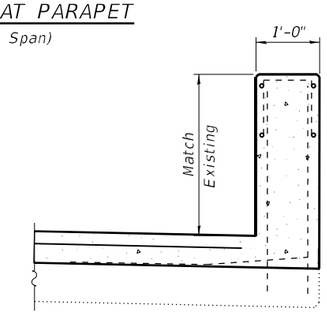

SECTION AT WING

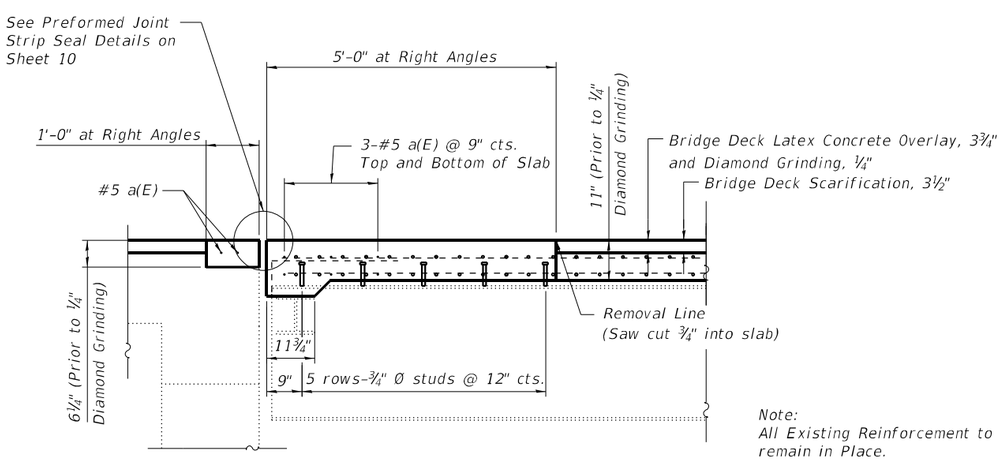

Note:
All Existing Reinforcement to
remain in Place.

SECTION A-A

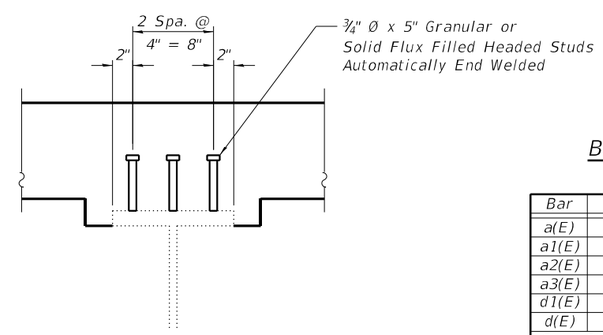

SECTION AT BEAM
AT DECK END

BILL OF MATERIAL

(S.N. 057-0182)

Bar	No.	Size	Length	Shape
a(E)	4	#5	18'-3"	
a1(E)	12	#5	19'-0"	
a2(E)	4	#5	22'-0"	
a3(E)	12	#5	22'-2"	
d1(E)	12	#5	4'-6"	
d(E)	12	#4	4'-7"	
Stud Shear Connectors			Each	180
Reinforcement Bars, Epoxy Coated			Pound	780
Concrete Superstructure			Cu. Yd.	20.1

BILL OF MATERIAL

(S.N. 057-0183)

Bar	No.	Size	Length	Shape
a(E)	4	#5	18'-3"	
a1(E)	12	#5	19'-0"	
a2(E)	4	#5	22'-0"	
a3(E)	12	#5	22'-2"	
d1(E)	12	#5	4'-6"	
d(E)	12	#4	4'-7"	
Stud Shear Connectors			Each	180
Reinforcement Bars, Epoxy Coated			Pound	780
Concrete Superstructure			Cu. Yd.	20.1

Reinforcement bars designated (E) shall be epoxy coated.

MODEL: Deck End Rebar 1
FILE NAME: P:\Effingham\3454 - PTB 189 IDOT D5 VA\Work Order #6\Cadd\Sheet\183 & 182\D570D64_0182_0183_Combined.dgn
11/29/2021 1:17:08 PM

CDI CIVIL DESIGN, INC. WBE / DBE EFFINGHAM, IL LICENSE #184.003222

USER NAME =	DESIGNED - KAS	REVISED -	
	CHECKED - TJZ	REVISED -	
PLOT SCALE =	DRAWN - DWS	REVISED -	
PLOT DATE =	CHECKED - KAS	REVISED -	

STATE OF ILLINOIS
DEPARTMENT OF TRANSPORTATION

SUPERSTRUCTURE PLAN - DECK END REINFORCING
S.N. 057-0182 (SB) & S.N. 057-0183 (NB)

SHEET 9 OF 13 SHEETS

F.A.I. RTE.	SECTION	COUNTY	TOTAL SHEETS	SHEET NO.
55	(57-1,57-2)BDS	MCLEAN	88	79

CONTRACT NO. 70D64

ILLINOIS FED. AID PROJECT

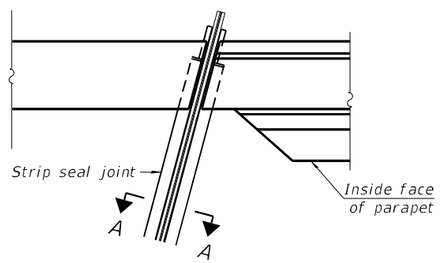

PLAN AT PARAPET

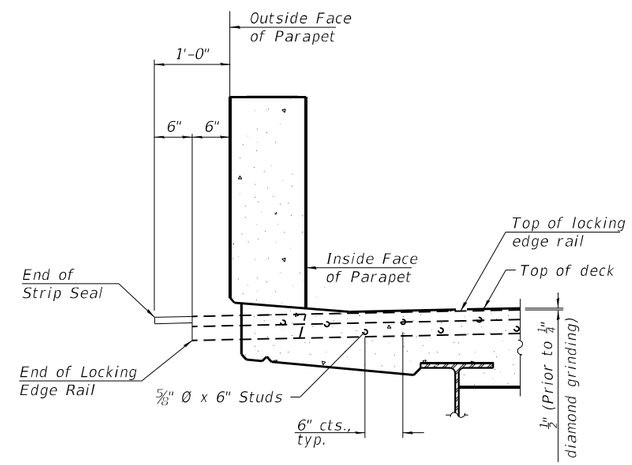

ELEVATION AT PARAPET

Notes:

The strip seal shall be made continuous and shall have a minimum thickness of 1/4". The configuration of the strip seal shall match the configuration of the locking edge rails. Open or "webbed" strip seal gland configurations are not permitted. The gland shall be sized for a maximum rated movement of 4 inches.

The locking edge rails depicted are configured for typical applications and are conceptual only. The actual configuration of the locking edge rails and matching strip seal may vary from manufacturer to manufacturer provided they fit the application and meet the minimum anchorage shown. Flanged edge rails, however, will not be allowed. Locking edge rails may exceed the 4 1/2" maximum depth provided the anchorage system is revised according to the manufacturer's recommendation.

The manufacturer's recommended installation methods shall be followed.

All steel components shall be galvanized after fabrication according to Article 520.03 of the Standard Specifications.

The Maximum space between locking edge rail segments shall be 3/16" and sealed with a suitable sealant; however, any rail joint within 10' measured perpendicular to the face of the curb or parapet shall be welded as shown in the locking edge rail splice detail.

The concrete opening below the strip seal will vary based on the locking edge rail chosen by the Contractor. Deck and parapet lengths shown elsewhere in the plans are dimensioned to the concrete opening, not the joint opening, and are based on the rolled locking edge rail. If the Contractor elects to use a different locking edge rail, dimensional adjustments may be required. One exception to this would be the strip seal joint at the end of the precast bridge approach slab. For these cases the pavement connector length shall be adjusted, not the length of the bridge approach slab.

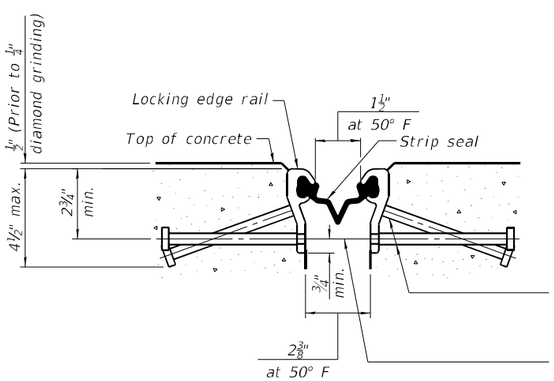

SHOWING ROLLED RAIL JOINT

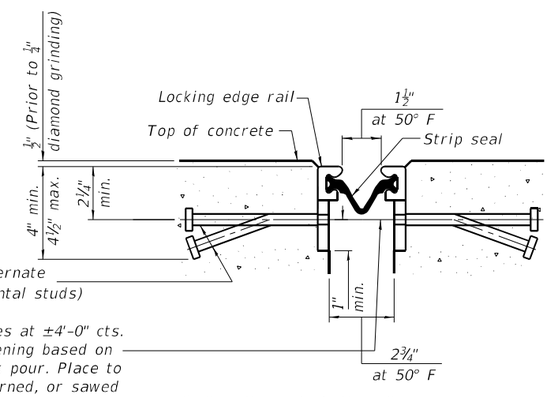

SHOWING WELDED RAIL JOINT

* 5/8" Ø x 6" studs @ 6" cts. (alternate angled/bent studs with horizontal studs)

3/8" ϕ threaded rods in 7/16" ϕ holes at ±4'-0" cts. for holding the proper joint opening based on the temperature during the deck pour. Place to miss studs. All rods shall be burned, or sawed off flush with the plates after concrete is set.

SECTION A-A

* Granular or solid flux filled headed studs conforming to Article 1006.32 of the Std. Specs., automatically end welded.

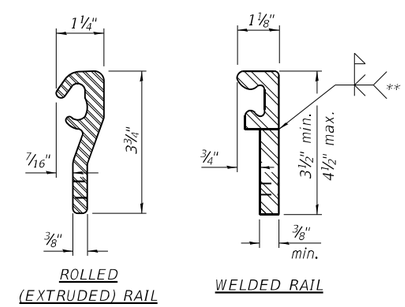

ROLLED (EXTRUDED) RAIL

WELDED RAIL

LOCKING EDGE RAILS

** Back gouge not required if complete joint penetration is verified by mock-up.

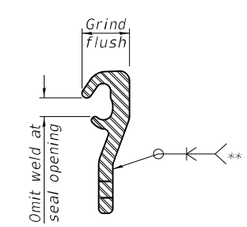

LOCKING EDGE RAIL SPLICE

The inside of the locking edge rail groove shall be free of weld residue. Rolled rail shown, welded rail similar.

BILL OF MATERIAL

Structure	Item	Unit	Total
057-0182	Preformed Joint Strip Seal	Foot	92
057-0183	Preformed Joint Strip Seal	Foot	92

MODEL: Joint Strip Seal
FILE NAME: P:\Effingham\3454 - PTB 189 IDOT D5 VA\Work Order #6\Cadd\Sheet\183 & 182\D570D64_0182_0183_Combined.dgn

CIVIL DESIGN, INC.
WBE / DBE
EFFINGHAM, IL
LICENSE #184.003222

USER NAME =	DESIGNED - KAS	REVISED -	
	CHECKED - TJZ	REVISED -	
PLOT SCALE =	DRAWN - DWS	REVISED -	
PLOT DATE =	CHECKED - KAS	REVISED -	

STATE OF ILLINOIS
DEPARTMENT OF TRANSPORTATION

PREFORMED JOINT STRIP SEAL DETAILS
S.N. 057-0182 (SB) & S.N. 057-0183 (NB)

SHEET 10 OF 13 SHEETS

F.A.I. RTE.	SECTION	COUNTY	TOTAL SHEETS	SHEET NO.
55	(57-1,57-2)BDS	MCLEAN	88	80

CONTRACT NO. 70D64

ILLINOIS FED. AID PROJECT

10/21/2021 3:06:39 PM

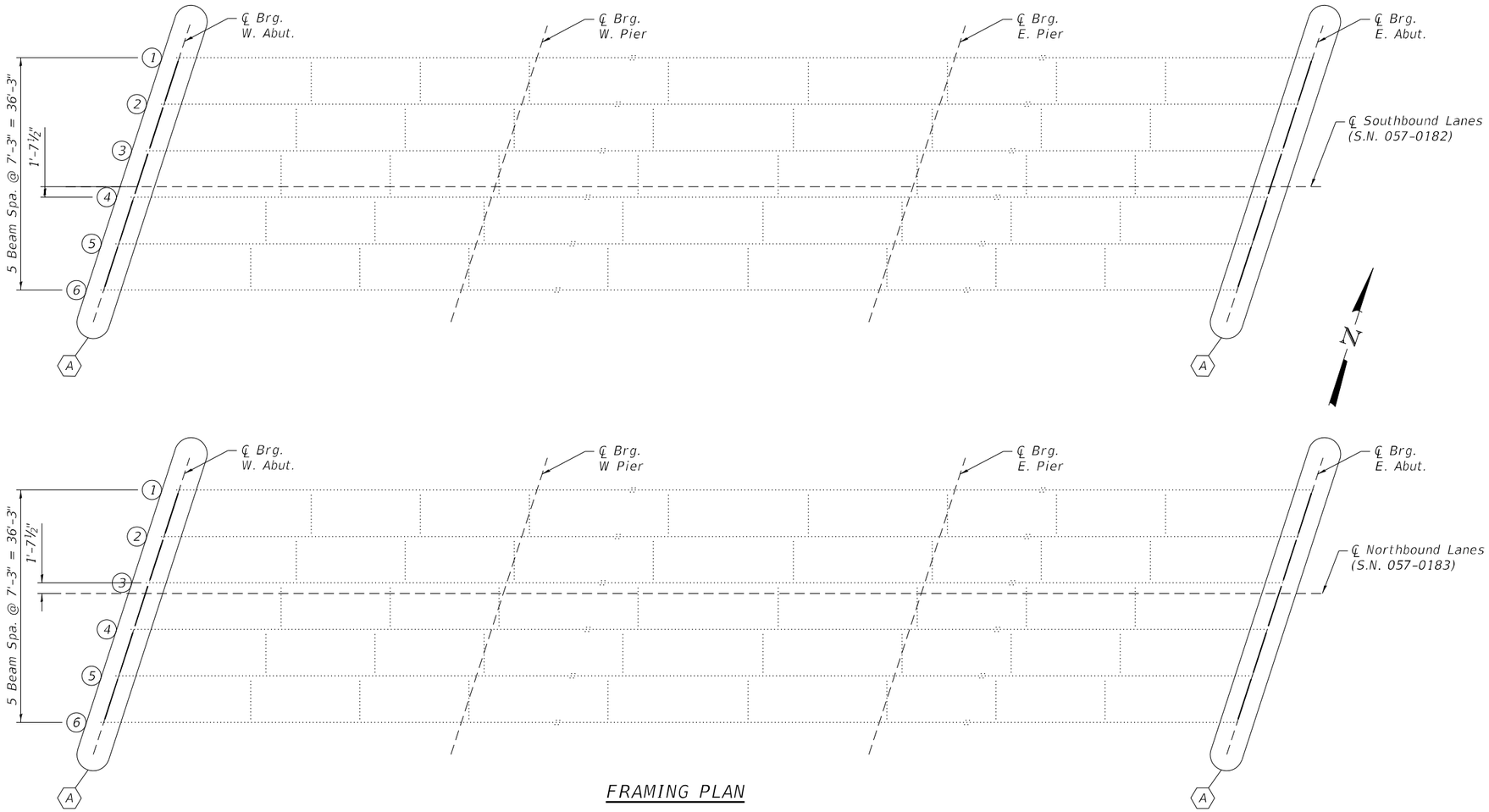

FRAMING PLAN

(A) Diaphragm Replacement

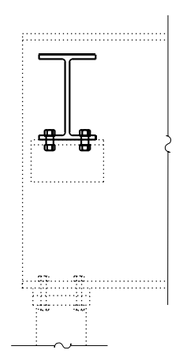

SECTION B-B

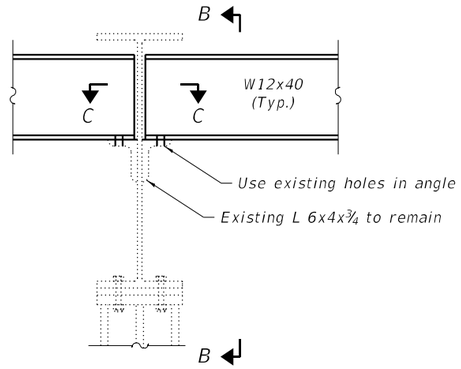

ELEVATION

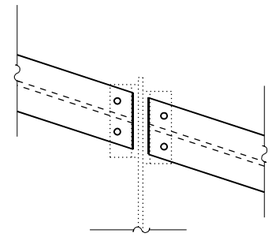

SECTION C-C

NOTES:

All structural steel shall conform to AASHTO Classification M-270 GR. 36, unless otherwise noted.

Fastners shall be high strength bolts. Bolts ¾"Ø, open holes 13/16"Ø, unless otherwise noted.

Diaphragm connection holes shall be 13/16"Ø for ¾"Ø bolts. Two hardened washers shall be required at diaphragm connections.

Plan dimensions and details relative to existing plans are subject to nominal construction variations. The Contractor shall field verify existing dimensions and details affecting new construction and make necessary approved adjustments prior to construction or ordering of materials. Such variations shall not be cause for additional compensation for a change in scope of the work, however, the Contractor will be paid for the quanity actually furnished at the unit price bid for the work.

Existing structural steel that will be in contact with new structural steel shall be cleaned and painted prior to erection as required by the GBSP "Cleaning and Painting Contact Surface Areas of Existing Steel Structures".

All structural steel shall be hot-dip galvanized. See Special Provisions for "Hot Dip Galvanizing For Structural Steel".

Cost of removal and re-installation of all members necessary to complete the work as detailed on the plans and as specified in the Special Provisions shall be included with Furnishing and Erecting Structural Steel.

BILL OF MATERIAL

Structure	Item	Unit	Total
057-0182	Furnishing and Erecting Structural Steel	Pound	3030
	Structural Steel Removal	Pound	3030
057-0183	Furnishing and Erecting Structural Steel	Pound	3030
	Structural Steel Removal	Pound	3030

Structural Repair of Concrete
Depth equal to or Less than 5"

Note:

See Special Provision for Structural Repair of Concrete.

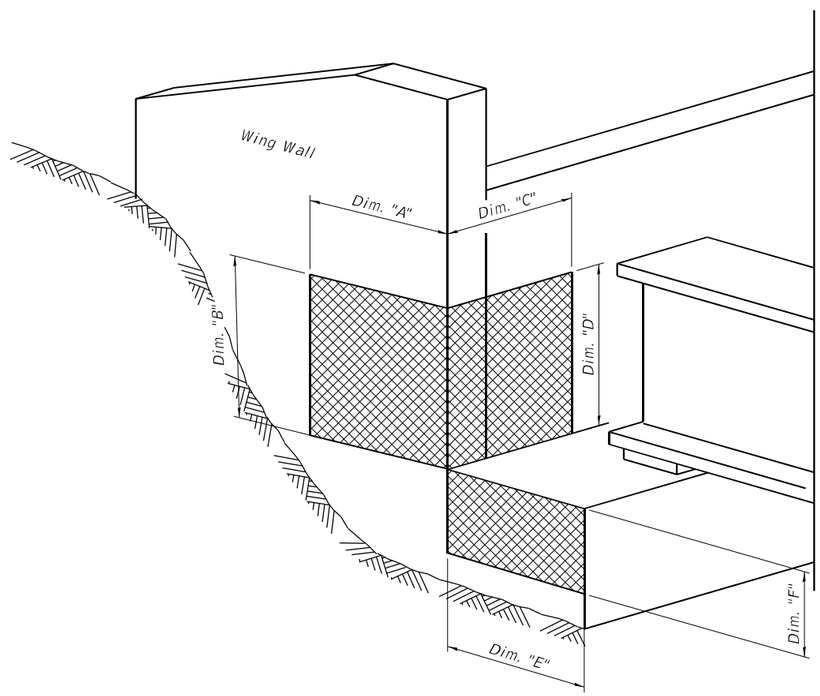

ISOMETRIC VIEW AT ABUTMENT CORNER

S.N. 057-0182
TABLE FOR STRUCTURAL REPAIR OF CONCRETE

ABUTMENT CORNER	Repair Area Dimensions						Repair Area Sq. Ft.
	Wingwall		Backwall		Abutment Seat		
	A	B	C	D	E	F	
Northeast	2	2	-	-	-	-	4
Southeast	1	2	1	1	-	-	3
Northwest	1	3	-	-	-	-	3
Southwest	3	4	-	-	-	-	12

S.N. 057-0183
TABLE FOR STRUCTURAL REPAIR OF CONCRETE

ABUTMENT CORNER	Repair Area Dimensions						Repair Area Sq. Ft.
	Wingwall		Backwall		Abutment Seat		
	A	B	C	D	E	F	
Northeast	2	3	3	4	-	-	18
Southeast	2	1	2	3	-	-	8
Northwest	3	3	2	4	-	-	17
Southwest	2	2	1	1	-	-	5

BILL OF MATERIAL

Structure	Item	Unit	Total
057-0182	Structural Repair of Concrete, Depth Equal to or Less than 5"	Sq. Ft.	22
057-0183	Structural Repair of Concrete, Depth Equal to or less than 5"	Sq. Ft.	48

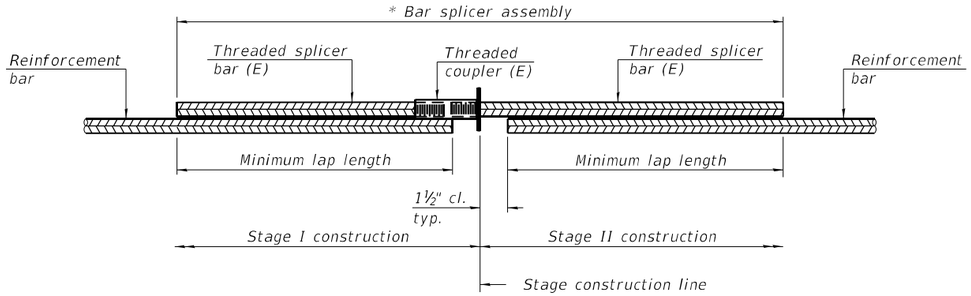

STANDARD BAR SPLICER ASSEMBLY PLAN

(All components shall be provided from one supplier)

Threaded splicer bar length = min. lap length + 1½" + thread length

* Epoxy not required on Bar Splicer Assembly components used in conjunction with black bars.

Structure	Location	Bar size	No. assemblies required	Minimum lap length
057-0182	Deck End	#5	16	3'-6"
057-0183	Deck End	#5	16	3'-6"

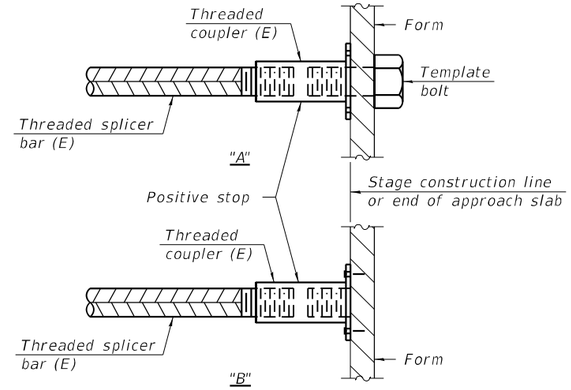

INSTALLATION AND SETTING METHODS

"A" : Set bar splicer assembly by means of a template bolt.
"B" : Set bar splicer assembly by nailing to wood forms or cementing to steel forms.
(E) : Indicates epoxy coating.

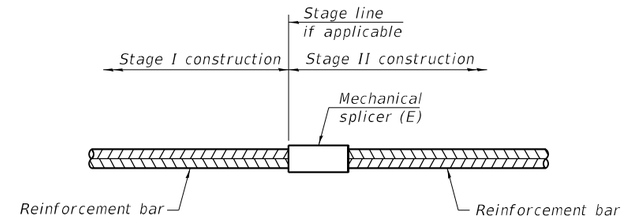

STANDARD MECHANICAL SPLICER

Location	Bar size	No. assemblies required

Notes:
Splicer bars shall be deformed with threaded ends and have a minimum 60 ksi yield strength.
All reinforcement shall be lapped and tied to the splicer bars.
Bar splicer assemblies shall be epoxy coated according to the requirements for reinforcement bars. See Section 508 of the Standard Specifications.
See approved list of bar splicer assemblies and mechanical splicers for alternatives.

BSD-1 1-1-2020

MODEL: BSD
FILE NAME: P:\Effingham\3454 - PTB 189 IDOT D5 VA\Work Order #6\Cadd\Sheet\183 & 182\D570D64_0182_0183_Combined.dgn
11/29/2021 1:18:14 PM

CDI CIVIL DESIGN, INC. WBE / DBE EFFINGHAM, IL LICENSE #184.003222

USER NAME =	DESIGNED - KAS	REVISED -	
	CHECKED - TJZ	REVISED -	
PLOT SCALE =	DRAWN - DWS	REVISED -	
PLOT DATE =	CHECKED - KAS	REVISED -	

STATE OF ILLINOIS
DEPARTMENT OF TRANSPORTATION

BAR SPLICER ASSEMBLY AND MECHANICAL SPLICER DETAILS
S.N. 057-0182 (SB) & S.N. 057-0183 (NB)
SHEET 13 OF 13 SHEETS

F.A.I. RTE.	SECTION	COUNTY	TOTAL SHEETS	SHEET NO.
55	(57-1,57-2)BDS	MCLEAN	88	83

CONTRACT NO. 70D64
ILLINOIS FED. AID PROJECT

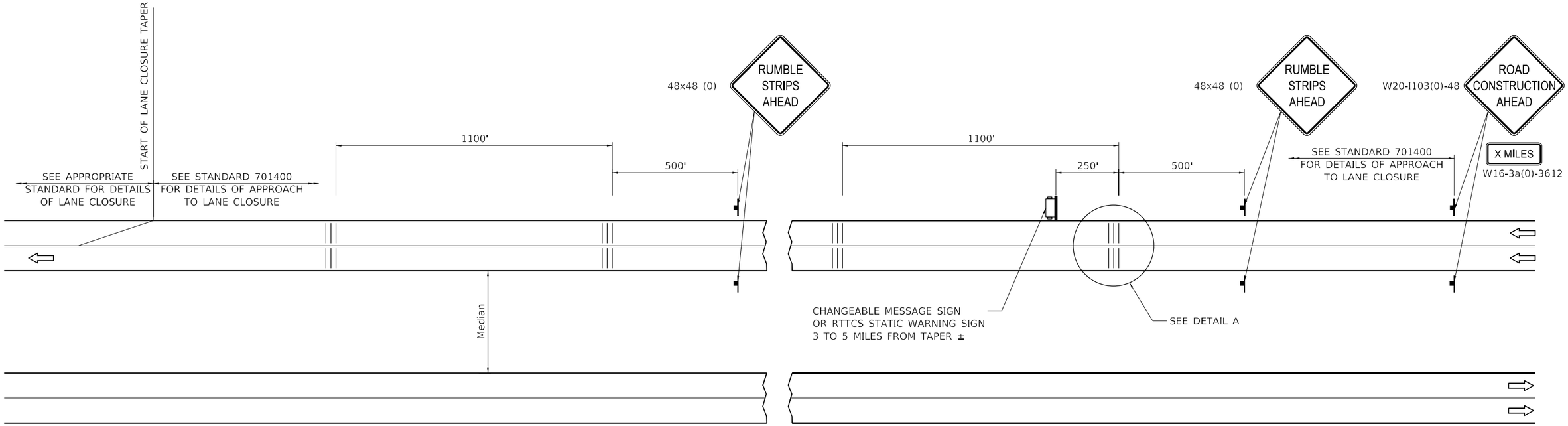

DETAIL A

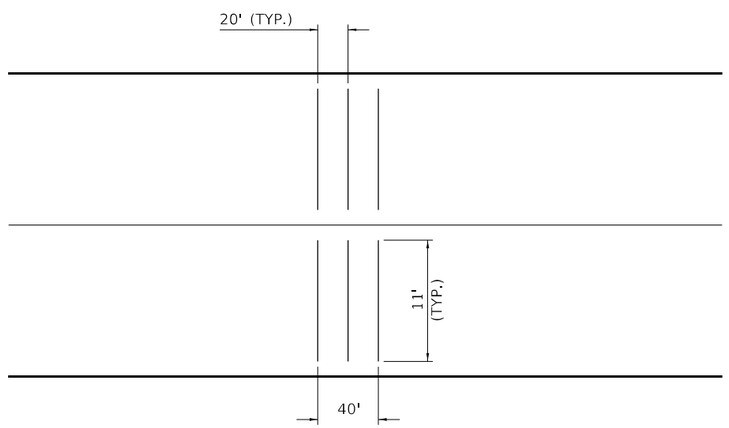

SYMBOLS

- SIGN
- TEMPORARY RUMBLE STRIPS (SPECIAL)
- TRAILER MOUNTED SIGN
- RTTCS STATIC WARNING SIGN

GENERAL NOTES

REMOVE THE TEMPORARY RUMBLE STRIPS (SPECIAL) PRIOR TO THE REMOVAL OF THE ADVANCED WARNING SIGNS.

ALL DIMENSIONS ARE IN INCHES UNLESS OTHERWISE SHOWN.

PLACE TEMPORARY RUMBLE STRIPS PRIOR TO ANY WORK AREA LANE CLOSURES.

MODEL: Default
FILE NAME: P:\Effingham\3454 - PPB 189 TQT DS V-V\Work Order #8\Cadd\Sheet\D570D64_GH_Details_Temp_Rumble.dgn

CDI CIVIL DESIGN, INC. WBE / DBE EFFINGHAM, IL LICENSE #184.003222	USER NAME = rhanfland	DESIGNED - WMK	REVISED -	STATE OF ILLINOIS DEPARTMENT OF TRANSPORTATION	TEMPORARY RUMBLE STRIPS (SPECIAL)	F.A.I. RTE.	SECTION	COUNTY	TOTAL SHEETS / SHEET NO.
		DRAWN - DMM	REVISED -			55	(57-1,57-2)BDS	MCLEAN	88 / 84
	PLOT SCALE = 40.0000 ' / in.	CHECKED - RLH	REVISED -					CONTRACT NO. 70D64	
	PLOT DATE = 10/21/2021	DATE - 10/21/2021	REVISED -		SCALE: N.T.S. / SHEET 1 OF 1 SHEETS / STA. / TO STA.		ILLINOIS	FED. AID PROJECT	

CENTERLINE INTERSTATE OR MULTI-LANE TWO WAY DIVIDED HIGHWAY

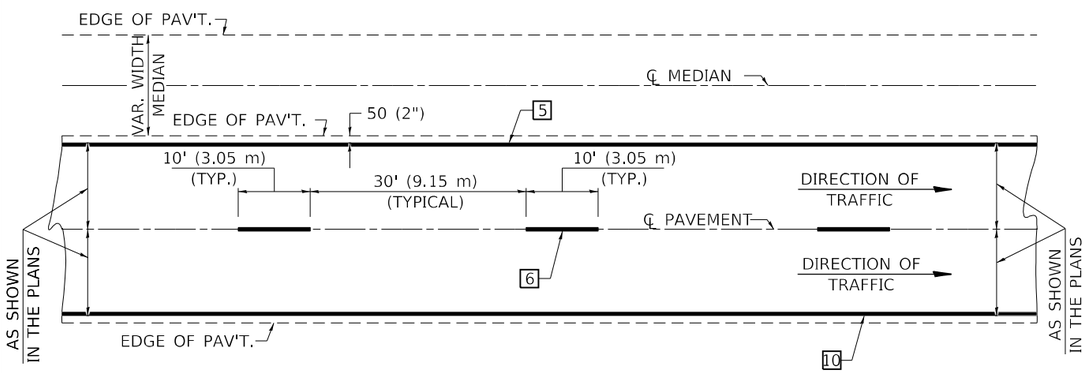

NOTE: PAVEMENT MARKINGS ARE TO BE EXTENDED THROUGH OMISSIONS WHEN APPLICABLE.

NOTE: SEE ARTICLES 780.04 & 781.03 FOR LOCATION OF STRIPES AND MARKERS RELATIVE TO EDGES OR JOINTS.

FOR RAISED REFLECTIVE PAVEMENT MARKERS, REFER TO STANDARD 781001.

TYPICAL PAVEMENT MARKING LEGEND

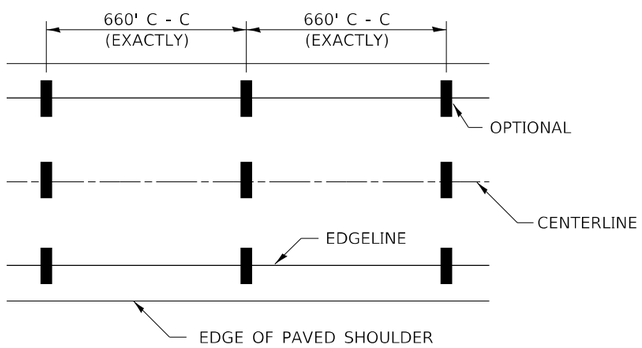

IT WILL BE NECESSARY TO HAVE A REPRESENTATIVE OF THE STATE POLICE PRESENT SO THAT THE ACCURACY OF MEASUREMENT CAN BE ATTESTED TO IN COURT.

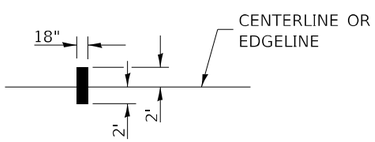

AERIAL SPEED CHECK ZONES

1. 4" (100) SKIP-DASH (YELLOW)
2. 4" (100) SOLID (YELLOW)
3. 12" (300) DIAGONAL (YELLOW)
4. 4" (100) DOUBLE YELLOW (NARROW)
5. 6" (150) SOLID (YELLOW)
6. 6" (150) SKIP-DASH (WHITE)
7. 4" (100) SKIP-DASH (WHITE)
8. 4" (100) SOLID (WHITE)
9. 12" (300) DIAGONAL (WHITE)
10. 6" (150) SOLID (WHITE)
11. 24" (600) STOP BAR (WHITE)
12. 8" (200) SOLID (WHITE)
13. 6" (150) LANE LINE EXTENSIONS (WHITE)

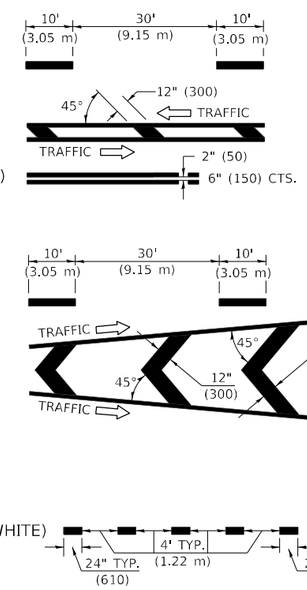

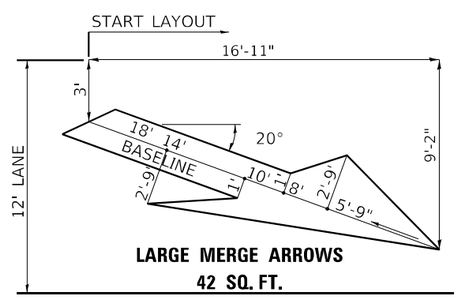

LARGE MERGE ARROWS
42 SQ. FT.

TYPICAL EXIT RAMP TERMINAL

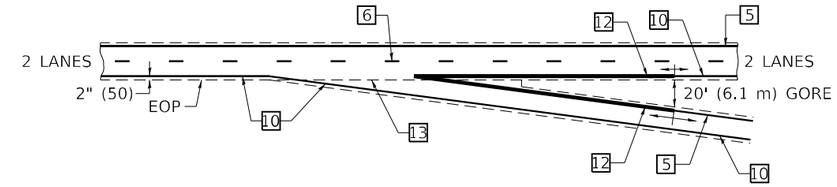

EXIT RAMP TERMINAL with EXCLUSIVE (auxiliary) LANE

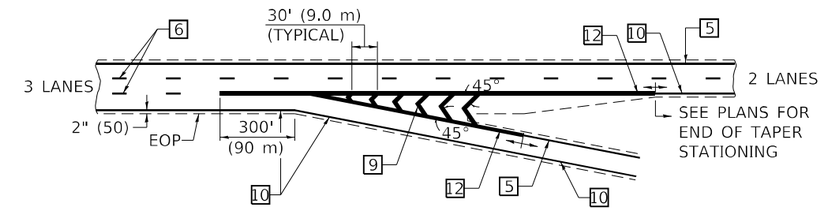

TYPICAL ENTRANCE RAMP TERMINAL

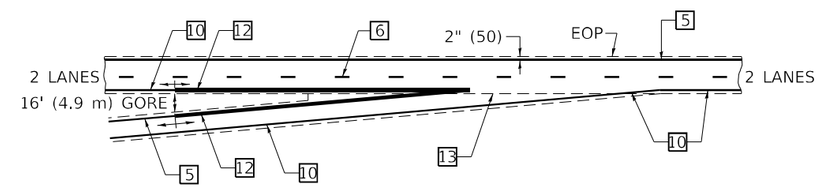

ENTRANCE RAMP TERMINAL with EXCLUSIVE LANE

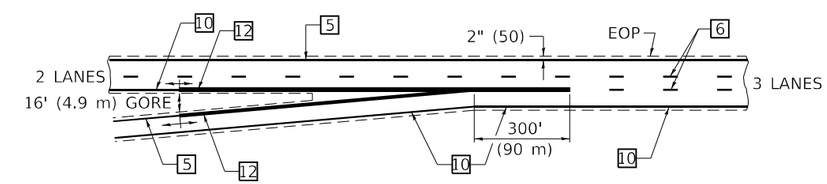

Note: All dimensions are in INCHES (millimeters) unless otherwise shown.

DISTRICT 5 DETAIL NO. 7800BBBB

CIVIL DESIGN, INC. WBE / DBE
EFFINGHAM, IL
LICENSE #184.003222

USER NAME = rhanfland	DESIGNED - WMK	REVISED -	
	DRAWN - DMM	REVISED -	
PLOT SCALE = 40.0000 ' / in.	CHECKED - RLH	REVISED -	
PLOT DATE = 10/21/2021	DATE - 10/21/2021	REVISED -	

STATE OF ILLINOIS
DEPARTMENT OF TRANSPORTATION

PAVEMENT MARKING (INTERSTATE & MULTI-LANE APPLICATIONS)

SCALE: N.T.S. | SHEET 1 OF 1 SHEETS | STA. TO STA.

F.A.I. RTE.	SECTION	COUNTY	TOTAL SHEETS	SHEET NO.
55	(57-1,57-2)BDS	MCLEAN	88	85
		CONTRACT NO. 70D64		
	ILLINOIS	FED. AID PROJECT		

MODEL: Default
FILE NAME: P:\Effingham\3454 - PTB 189 IDOT D5 VA\Work Order #8\Cadd\Sheet\D5720D64_dht Detail D5 7800BBBB Pavement Marking.dgn

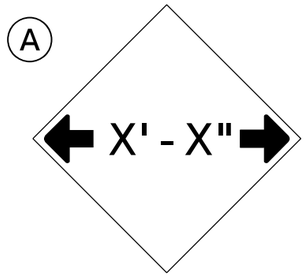

W12-2(0)-48"x48"(1200x1200)

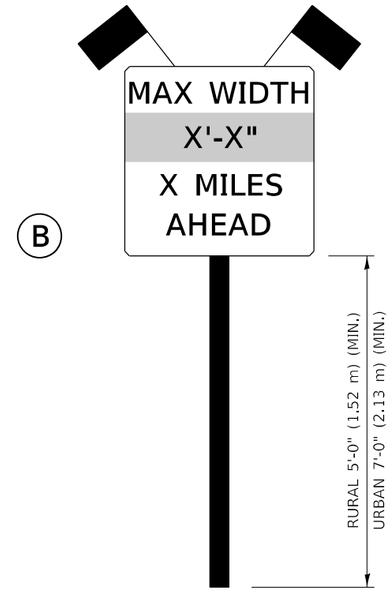

SIGN PANEL, TYPE II

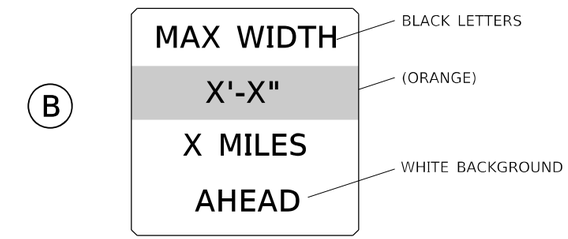

W12-I103(O)-48"x48"(1200x1200)
"D" LETTERS/NUMBERS

SIGN (A) 2 SIGNS - W12-2(O)-48"x48"(1200x1200) ARE TO BE PLACED AS SHOWN IN THE PLANS OR AS DIRECTED BY THE ENGINEER.

SIGN (B) 2 SIGNS - (SIGN PANEL, TYPE II) AS SHOWN ARE TO BE PLACED AS SHOWN IN THE PLANS OR AS DIRECTED BY THE ENGINEER.

NORTHBOUND STAGE WIDTHS:

057-0183
STAGE 1 WIDTH = 17'-3" ACTUAL: 15'-9": REQUIRED
STAGE 2 WIDTH = 13'-3" ACTUAL: 11'-9": REQUIRED
057-0174
STAGE 1 WIDTH = 17'-0" ACTUAL: 15'-6": REQUIRED
STAGE 2 WIDTH = 13'-6" ACTUAL: 12'-0": REQUIRED
057-0153
STAGE 1 WIDTH = 29'-3" ACTUAL: POSTING NOT REQUIRED
STAGE 2 WIDTH = 13'-3" ACTUAL: 11'-9": REQUIRED
057-0179
STAGE 1 WIDTH = 13'-3" ACTUAL: 11'-9": REQUIRED
STAGE 2 WIDTH = 13'-3" ACTUAL: 11'-9": REQUIRED

SOUTHBOUND STAGE WIDTHS:

057-0182
STAGE 1 WIDTH = 17'-3" ACTUAL: 15'-9": REQUIRED
STAGE 2 WIDTH = 13'-3" ACTUAL: 11'-9": REQUIRED
057-0173
STAGE 1 WIDTH = 17'-0" ACTUAL: 15'-6": REQUIRED
STAGE 2 WIDTH = 13'-6" ACTUAL: 12'-0": REQUIRED
057-0152
STAGE 1 WIDTH = 17'-3" ACTUAL: 15'-9": REQUIRED
STAGE 2 WIDTH = 13'-3" ACTUAL: 11'-9": REQUIRED
057-0178
STAGE 1 WIDTH = 13'-3" ACTUAL: 11'-9": REQUIRED
STAGE 2 WIDTH = 13'-3" ACTUAL: 11'-9": REQUIRED

GENERAL NOTES

1. ALL TRAFFIC CONTROL DEVICES SHALL BE FURNISHED, ERECTED AND MAINTAINED BY THE CONTRACTOR.
2. ALL (B) SIGNS SHALL HAVE FLAGS INSTALLED UNLESS OTHERWISE DIRECTED.
3. LOCATIONS OF TRAFFIC CONTROL DEVICES MAY BE ADJUSTED BY THE ENGINEER.
4. ALL TRAFFIC CONTROL SHOWN ON THIS SHEET SHALL BE PAID FOR AT THE CONTRACT LUMP SUM PRICE FOR WIDTH RESTRICTION SIGNING.
5. ALL SIGNS SHALL BE POST MOUNTED UNLESS OTHERWISE DIRECTED.
6. ALL SIGNS SHOWN ORANGE (O) SHALL BE FLUORESCENT ORANGE.
7. ALL SIGNS SHOWN SHALL CONSIST OF THE CURRENT RETROREFLECTIVE SHEETING REQUIREMENTS AS OUTLINED IN SECTION 1106.01 OF THE STANDARD SPECIFICATIONS BOOK.

NOTES:
MAX WIDTH - SEE MAINTENANCE OF TRAFFIC PLANS FOR SIGN LOCATIONS

DISTRICT 5 DETAIL NO. X7200201

MODEL: Default
FILE NAME: P:\Effingham\3454 - PTB 189 TQT DS V-V\Work Order #8\Cadd\Sheet\D570D64_GN_Detail DS X7200201 Width Restrictor Signing.dgn

CIVIL DESIGN, INC.
WBE / DBE
EFFINGHAM, IL
LICENSE #184.003222

USER NAME = rhanflland	DESIGNED - WMK	REVISED -	
	DRAWN - DMM	REVISED -	
PLOT SCALE = 40.0000 ' / in.	CHECKED - RLH	REVISED -	
PLOT DATE = 10/21/2021	DATE - 10/21/2021	REVISED -	

STATE OF ILLINOIS
DEPARTMENT OF TRANSPORTATION

WIDTH RESTRICTION SIGNING

SCALE: N.T.S. | SHEET 1 OF 1 SHEETS | STA. | TO STA.

F.A.I. RTE.	SECTION	COUNTY	TOTAL SHEETS	SHEET NO.
55	(57-1,57-2)BDS	MCLEAN	88	86
		CONTRACT NO. 70D64		
		ILLINOIS	FED. AID PROJECT	

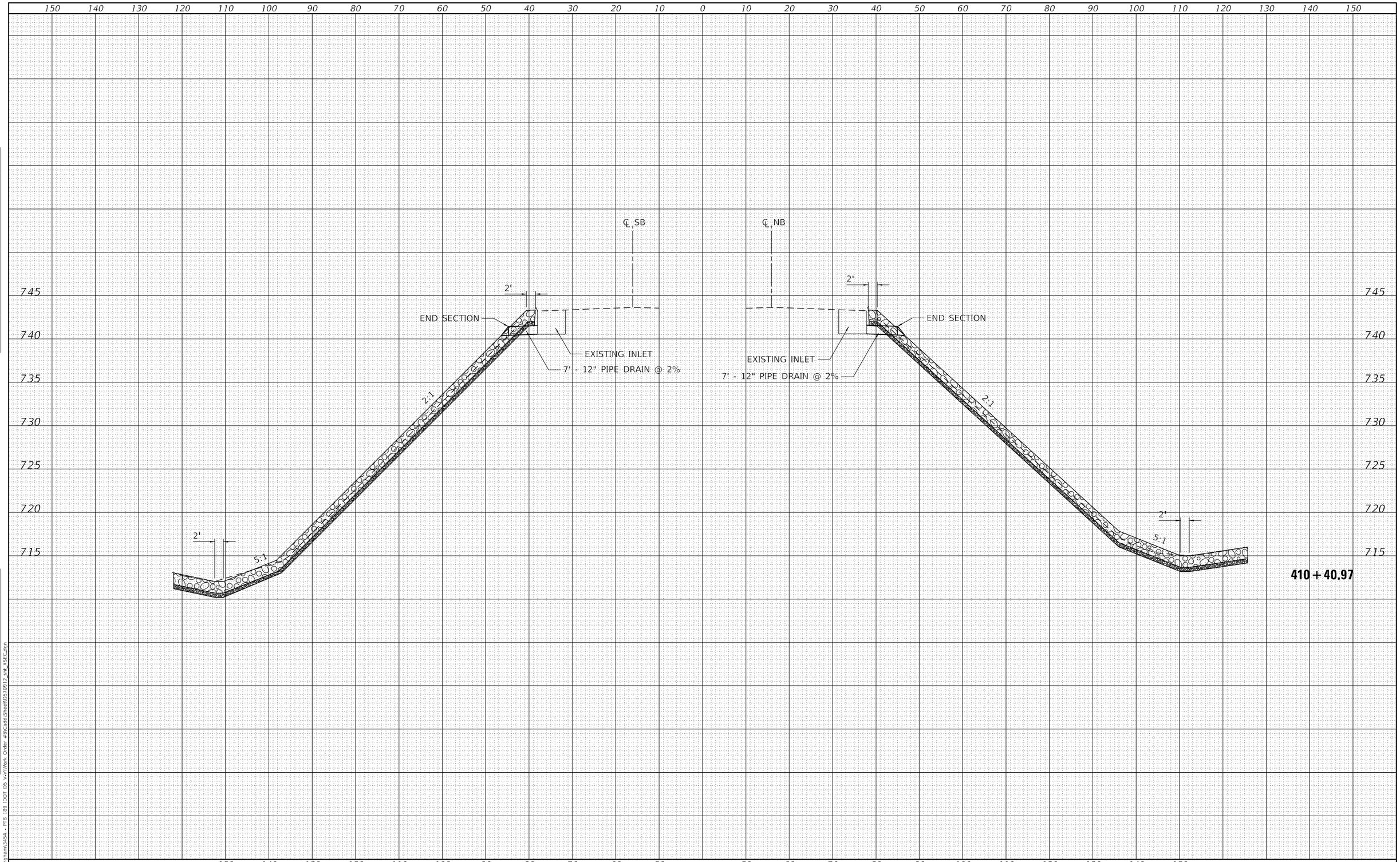

FINAL SURVEY	BY	DATE
SURVEYED		
PLOTTED		
TEMPLATE		
AREAS		
AREAS CHECKED		
NOTE BOOK		
NO.		

ORIGINAL SURVEY	BY	DATE
SURVEYED		
PLOTTED		
TEMPLATE		
AREAS		
AREAS CHECKED		
NOTE BOOK		
NO.		

MODEL: Default
FILE NAME: P:\Effingham\3454 - PTB 189 IDOT D5 V-V\Work Order #6\Cadd\Sheet\D570912_sht_XSEC.dgn

CIVIL DESIGN, INC.
WBE | DBE
EFFINGHAM, IL
LICENSE #184.003222

USER NAME = rhanfland	DESIGNED -	REVISED -
	DRAWN -	REVISED -
PLOT SCALE = 20.0000 ' / in.	CHECKED -	REVISED -
PLOT DATE = 10/21/2021	DATE -	REVISED -

STATE OF ILLINOIS
DEPARTMENT OF TRANSPORTATION

CROSS SECTIONS

SCALE: | SHEET 1 OF 2 SHEETS | STA. 410+22.27 TO STA. 410+40.97

F.A.I RTE.	SECTION	COUNTY	TOTAL SHEETS	SHEET NO.
55	(55-1,57-2)BDS	MCLEAN	88	87
		CONTRACT NO. 70D64		
		ILLINOIS	FED. AID PROJECT	

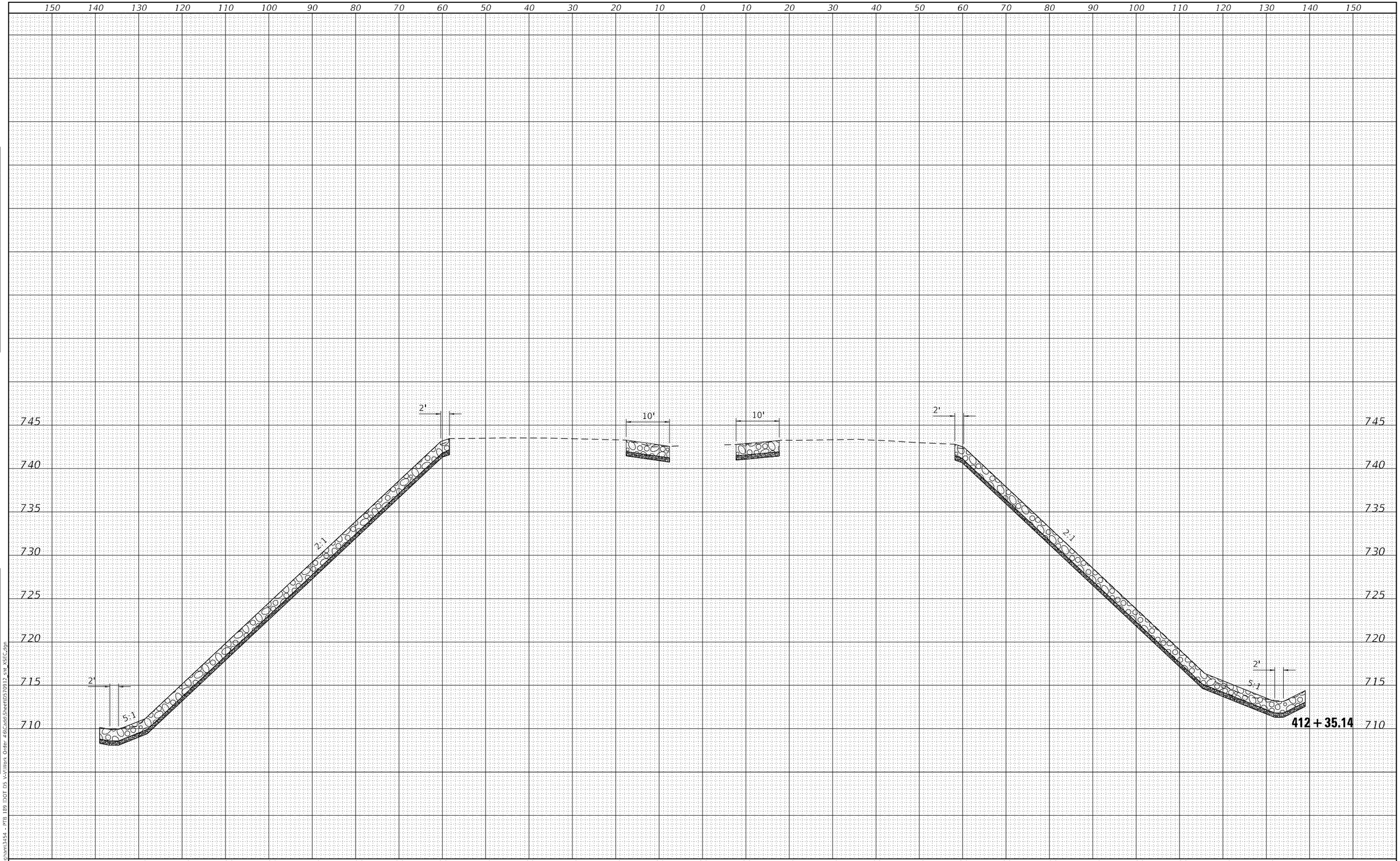

FINAL SURVEY	BY	DATE
SURVEYED		
PLOTTED		
TEMPLATE		
AREAS		
AREAS CHECKED		
NOTE BOOK		
NO.		

ORIGINAL SURVEY	BY	DATE
SURVEYED		
PLOTTED		
TEMPLATE		
AREAS		
AREAS CHECKED		
NOTE BOOK		
NO.		

MODEL: Default
FILE NAME: P:\Effingham\3454 - PTB 189 IDOT DS V-V\Work Order #6\Cadd\Sheet\D570912_cst_XSEC.dgn

CDI
CIVIL DESIGN, INC.
WBE | DBE
EFFINGHAM, IL
LICENSE #184.003222

USER NAME = rhanfland	DESIGNED -	REVISED -
	DRAWN -	REVISED -
PLOT SCALE = 20.0000 ' / in.	CHECKED -	REVISED -
PLOT DATE = 10/21/2021	DATE -	REVISED -

STATE OF ILLINOIS
DEPARTMENT OF TRANSPORTATION

CROSS SECTIONS

SCALE: | SHEET 2 OF 2 SHEETS | STA. 412+35.14 TO STA. 412+35.14

F.A.I RTE.	SECTION	COUNTY	TOTAL SHEETS	SHEET NO.
55	(57-1,57-2)BDS	MCLEAN	88	88
		CONTRACT NO. 70D64		
		ILLINOIS	FED. AID PROJECT	