F.A.I. RTE.	SECTION	COUNTY	TOTAL SHEETS	SHEET NO.
90	1414B	COOK	74	44
FED. ROAD DIST. NO. 7	ILLINOIS	FED. AID PROJECT		

CONTRACT NO. 60384

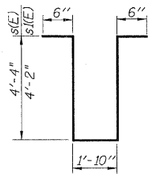

BARS s(E) & s1(E)

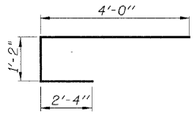

BAR x (E)

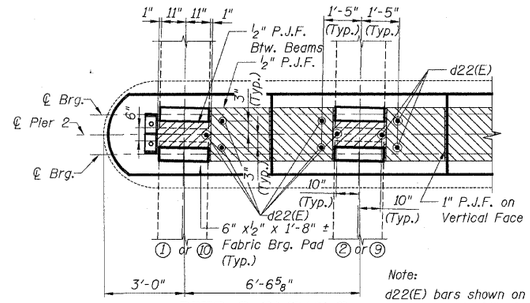

PIER 2 DETAILS

(Fixed)

Note:
d22(E) bars shown on this sheet are included in Bill of Materials on Sheet S26.

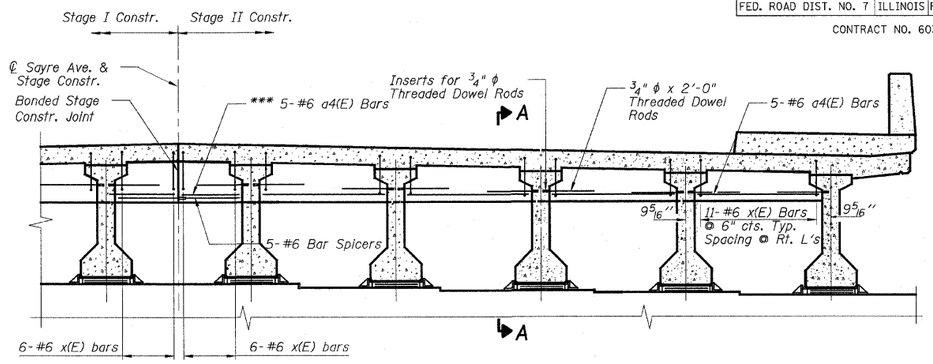

DIAPHRAGM AT ABUTMENT

(Looking North)

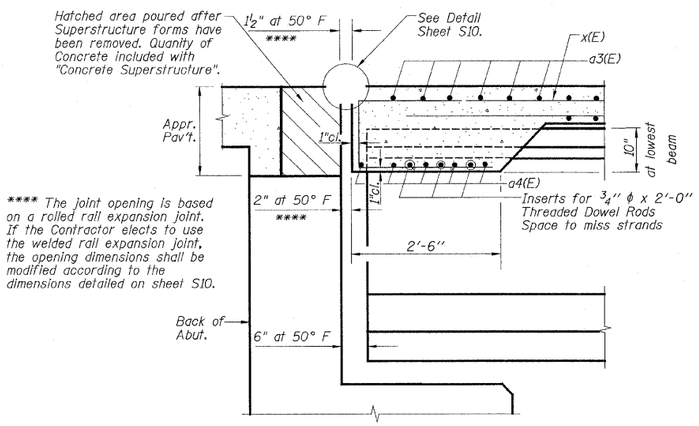

**** The joint opening is based on a rolled rail expansion joint. If the Contractor elects to use the welded rail expansion joint, the opening dimensions shall be modified according to the dimensions detailed on sheet S10.

SECTION A-A AT ABUTMENT

(at Rt. Ls)

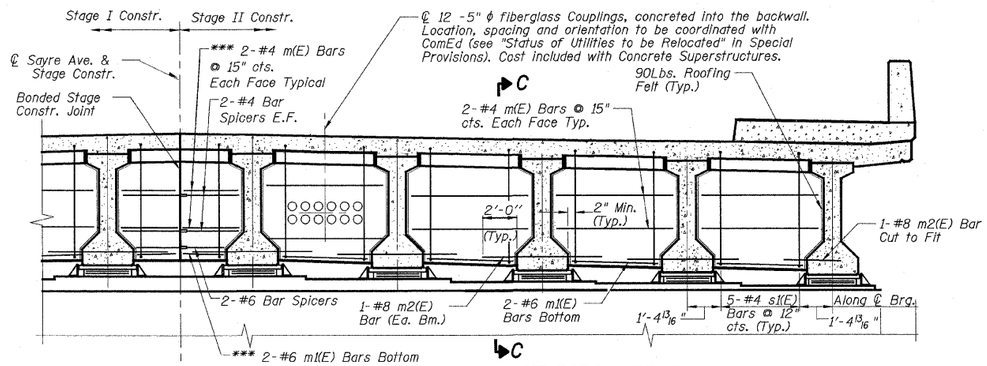

DIAPHRAGM AT PIER 1 OR 3

(Looking North)
(Expansion)

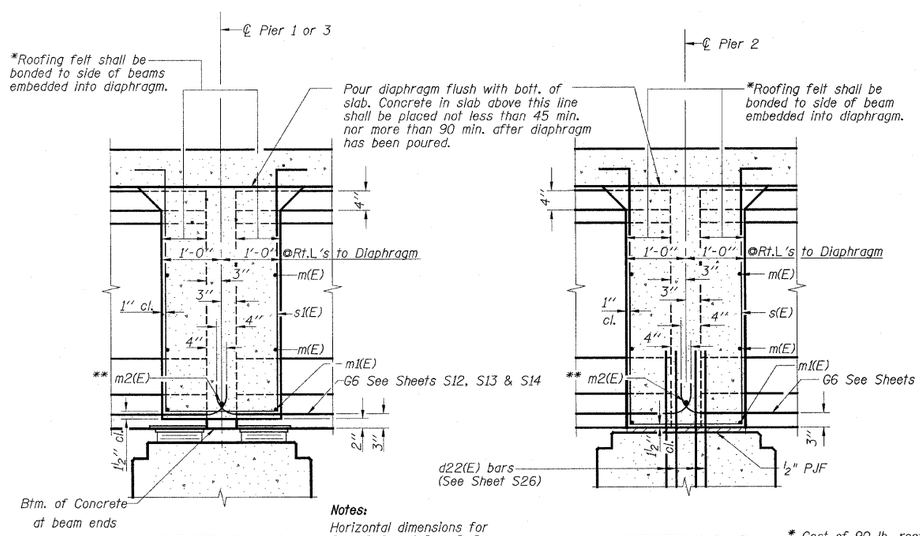

SECTION C-C AT PIER

(Expansion)

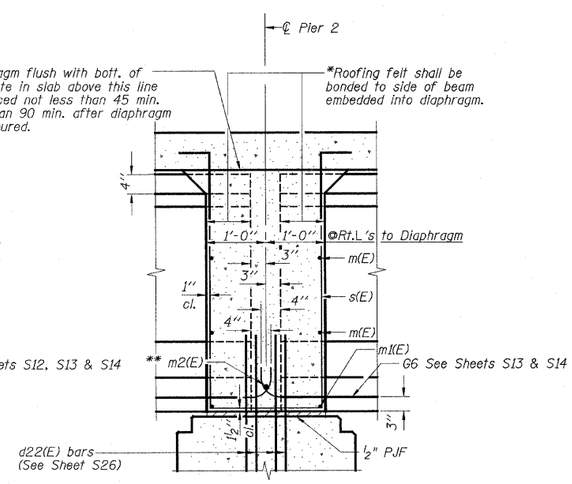

SECTION D-D AT PIER

(Fixed)

Notes:
Horizontal dimensions for Sec. C-C and Sec. D-D are along ℄ of beam unless otherwise noted.
G6(E) bars shown on this sheet are included in Bill of Materials Sheets S12, S13 & S14

* Cost of 90 lb. roofing felt is included with to "Concrete Superstructure"

** Tightly fasten the #8 bars together with No. 9 wire ties.

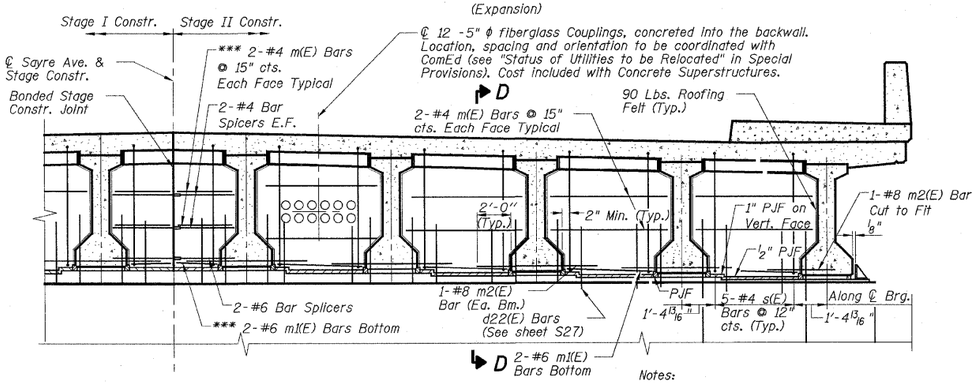

DIAPHRAGM AT PIER 2

(Looking North)
(Fixed)

Notes:
For Bill of Material see Sheet S8 unless otherwise stated
E.F. denotes Each Face

*** Order bar full length and cut to fit Stage I Construction. Use remainder for Stage II Construction.

REVISIONS	
NAME	DATE

ILLINOIS DEPARTMENT OF TRANSPORTATION

DIAPHAGM DETAILS
FA ROUTE 173 (SAYRE AVENUE) OVER
INTERSTATE 90 (KENNEDY EXPRESSWAY)
COOK COUNTY STATION 8+02.48
SECTION 267-1414-15D
STRUCTURE NO. 016-1104

SCALE: NONE DRAWN BY: R. Clinton
DATE: DEC. 2007 CHECKED BY: R. Kaye

PATRICK ENGINEERING INC.
LISLE, ILLINOIS