| F.A.I. RTE. | SECTION | COUNTY | TOTAL SHEETS | SHEET NO. |
|---|---|---|---|---|
| 90 | 1414B | COOK | 74 | 55 |
| FED. ROAD DIST. NO. 7 | ILLINOIS | FED. AID PROJECT | | |

CONTRACT NO. 60384

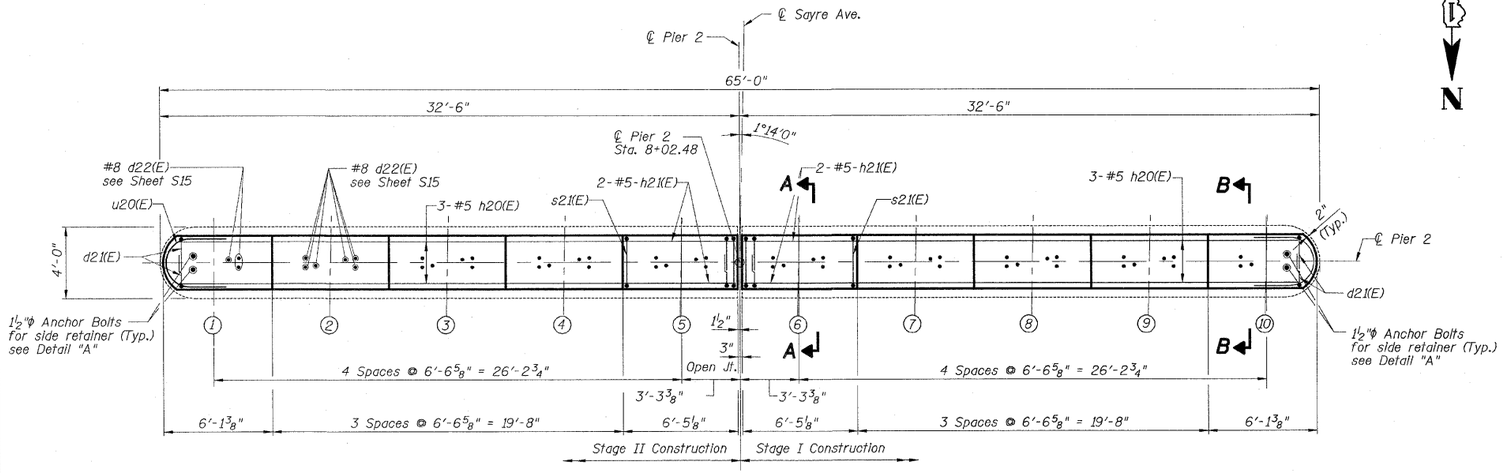


## PLAN

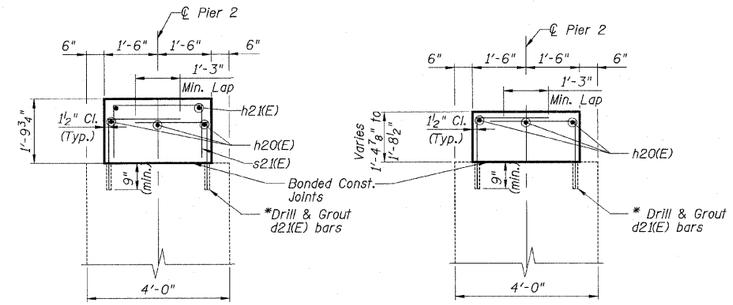


## SECTION A-A

## SECTION B-B

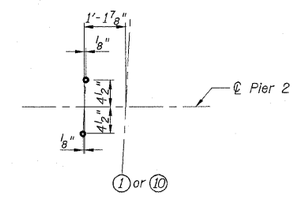


## DETAIL "A"

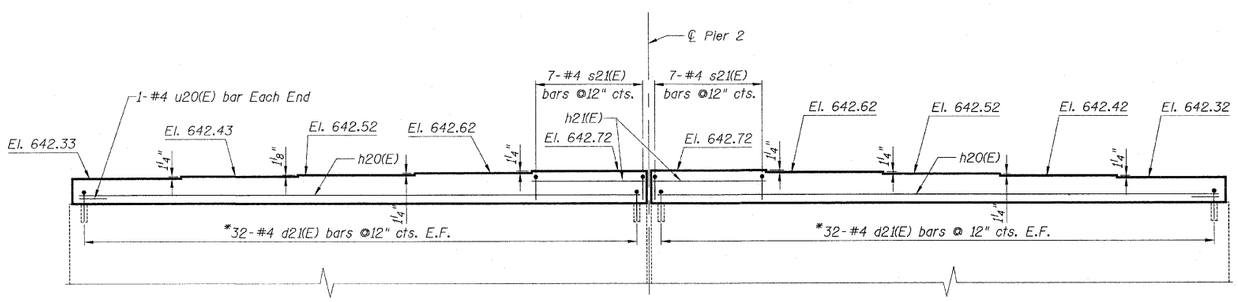


## ELEVATION PIER 2

(Looking North)

* Epoxy grout d21(E) bars in 9" min. drilled holes according to Section 584 of the Standard Specifications.

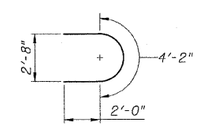


Bar u20(E)

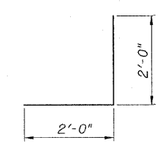


Bar d21(E)

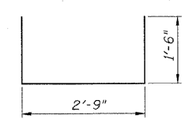


Bar s21(E)

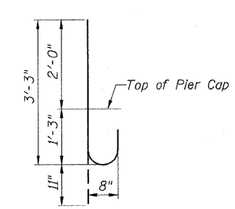


Bar d22(E)

## BILL OF MATERIAL

| Bar | No. | Size | Length | Shape |
|---|---|---|---|---|
| d21(E) | 128 | 4 | 4'-0" | |
| d22(E) | 54 | 8 | 4'-2" | |
| h20(E) | 6 | 5 | 31'-10" | |
| h21(E) | 4 | 5 | 6'-1" | |
| s21(E) | 14 | 4 | 5'-9" | |
| u20(E) | 2 | 4 | 8'-2" | |
| Concrete Structures | | | Cu. Yd. | 11.6 |
| Reinforcement Bars, Epoxy Coated | | | Pound | 1,260 |

NOTES:

Space reinforcement in cap to miss Anchor Bolts.

All edges shall have standard ¾" chamfer.

For Pier Repair and Concrete Removal see Sheet S23.

| REVISIONS | |
|---|---|
| NAME | DATE |
| | |
| | |
| | |
| | |
| | |
| | |
| | |
| | |

ILLINOIS DEPARTMENT OF TRANSPORTATION
PIER 2 REHABILITATION
FA ROUTE 173 (SAYRE AVENUE) OVER
INTERSTATE 90 (KENNEDY EXPRESSWAY)
COOK COUNTY STATION 8+02.48
SECTION 267-1414-15D
STRUCTURE NO. 016-1104

SCALE: NONE DRAWN BY: R. Clinton
DATE: DEC. 2007 CHECKED BY: R. Kaye

PATRICK ENGINEERING INC.
LISLE, ILLINOIS