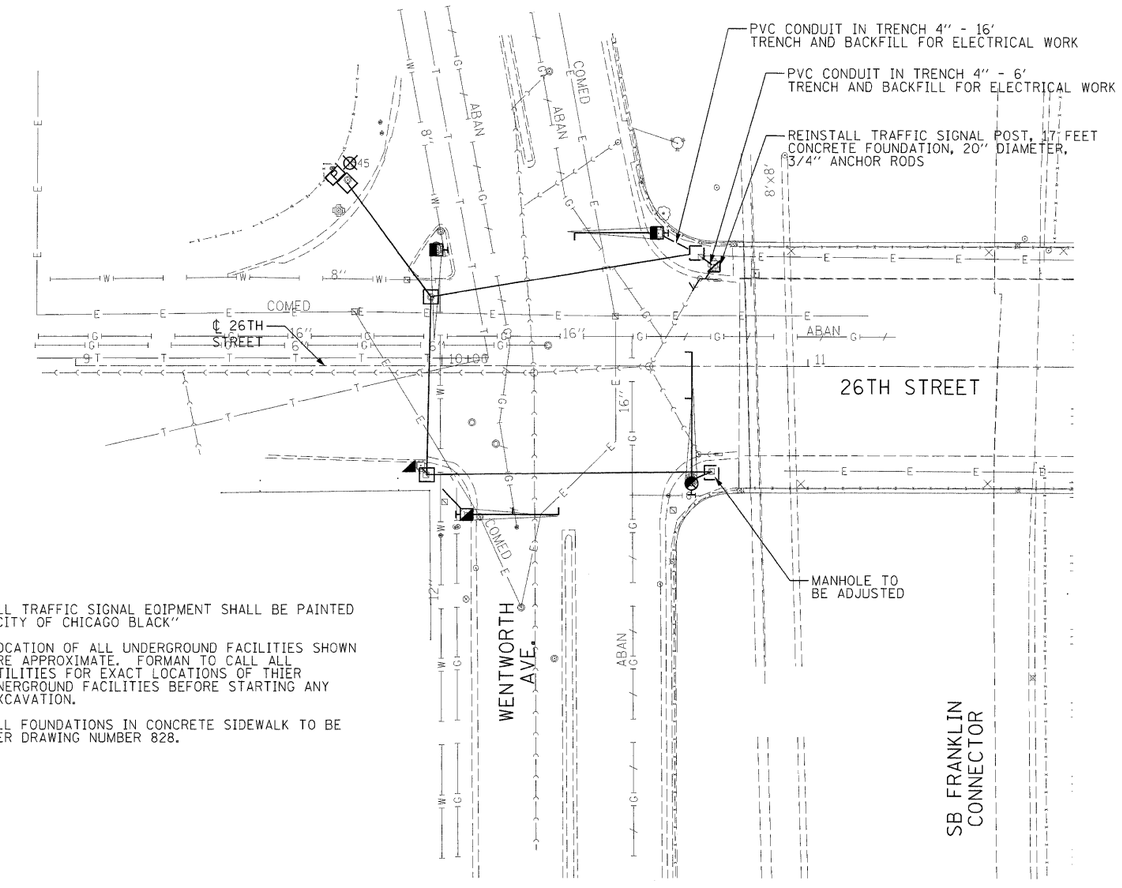

ALL TRAFFIC SIGNAL EQIPMENT SHALL BE PAINTED "CITY OF CHICAGO BLACK"

LOCATION OF ALL UNDERGROUND FACILITIES SHOWN ARE APPROXIMATE. FORMAN TO CALL ALL UTILITIES FOR EXACT LOCATIONS OF THIER UNERGROUND FACILITIES BEFORE STARTING ANY EXCAVATION.

ALL FOUNDATIONS IN CONCRETE SIDEWALK TO BE PER DRAWING NUMBER 828.

PROPOSED FOUNDATION AND CONDUIT PLAN

SCALE: 1" = 20'

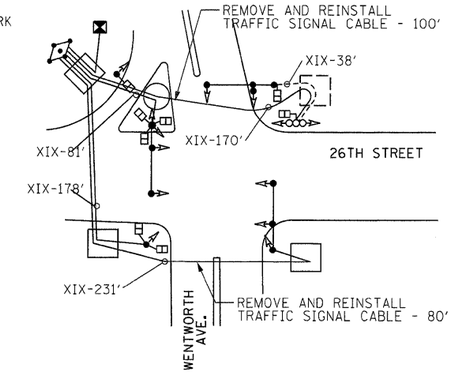

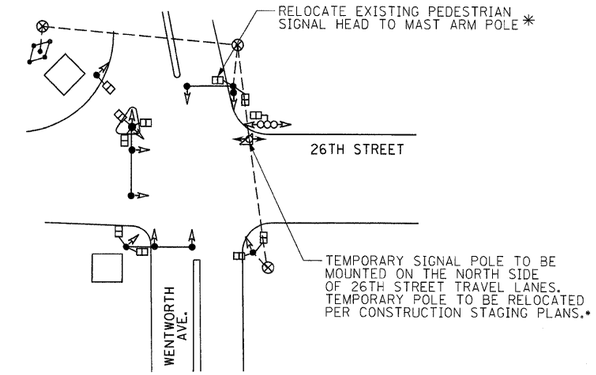

* PAID FOR AS TEMPORARY TRAFFIC SIGNAL INSTALLATION

TEMPORARY SIGNAL CABLE PLAN
NOT TO SCALE

- ⊗ — TEMPORARY WOOD POLE (CLASS 5 OR BETTER)
- ← — TEMPORARY SIGNAL HEAD
- ← — EXISTING SIGNAL HEAD IN OPERATION DURING TEMPORARY SIGNAL OPERATION
- ◿ — TEMPORARY SIGNAL POST ON CONCRETE BLOCK

TEMPORARY SIGNAL NOTES

1. EXISTING CONTROLLER CABINET TO BE USED FOR TEMPORARY CONTROL. CONTRACTOR TO CONTACT CITY OF CHICAGO BUREAU OF ELECTRICITY TO COORDINATE ACCESS TO EXISTING TRAFFIC CONTROL CABINET.
2. EXISTING SIGNALS ON WEST SIDE OF WENTWORTH AVE. TO REMAIN CONNECTED TO EXISTING CONTROLLER AND REMAIN IN OPERATION DURING CONSTRUCTION.
3. PEDESTRIAN SIGNAL HEADS SHALL BE DARKENED AND BAGGED WHEN ASSOCIATED CROSSWALK(S) ARE CLOSED PER TRAFFIC CONTROL PLAN

A	
DATE	REVISION

WORK ORDER NO. _____ DATE _____
COST ALLOCATION ACCOUNT _____
APPROPRIATION ACCOUNT { MATERIAL _____ / LABOR _____

FOUNDATION, CONDUIT, CABLE, AND SIGNAL PLAN
TRAFFIC CONTROL SIGNALS
WENTWORTH AVENUE AND 26TH STREET

CITY OF CHICAGO
BUREAU OF ELECTRICITY
DIVISION OF ELECTRICAL ENGINEERING

DRAFTSMAN:	CHIEF DRAFTSMAN:	ENGINEER:
SUPERVISING ENGINEER		DWG. NO.
CHIEF HIGHWAY ENGINEER:		14471
SUPT. OF CONSTRUCTION:		
DEPUTY COMMISSIONER:		
SIZE:	SCALE: AS NOTED	

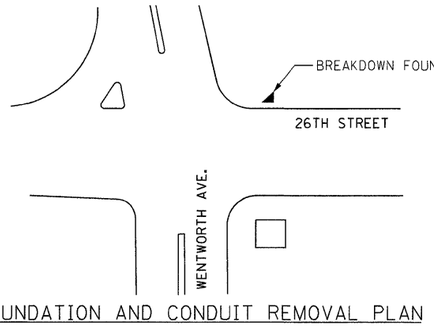

FOUNDATION AND CONDUIT REMOVAL PLAN
NOT TO SCALE

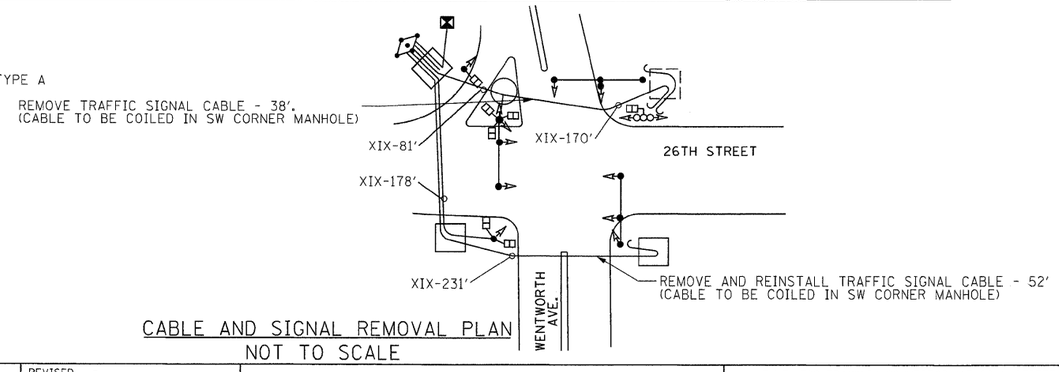

CABLE AND SIGNAL REMOVAL PLAN
NOT TO SCALE

SIG-01

FILE NAME = p:_2008\cl\15800\cadd\Sheet\TMP_SIG.dgn		DESIGNED - CH	REVISED -	STATE OF ILLINOIS DEPARTMENT OF TRANSPORTATION	F.A.P. 392 FRANKLIN CONNECTOR (AT 26th STREET AND AT I-55 FRONTAGE ROAD B)	F.A.P RTE.	SECTION	COUNTY	TOTAL SHEETS	SHEET NO.
JE JACOBS		DRAWN - MP	REVISED -		TEMPORARY TRAFFIC SIGNAL PLAN	392	1717.2-3B-R	COOK	114	26E
		CHECKED - ML	REVISED -			CONTRACT NO. 62197				
	PLOT DATE = 1/29/2009	DATE - 01/13/09	REVISED -		SCALE: SHEET NO. OF SHEETS STA. TO STA.	FED. ROAD DIST. NO.	ILLINOIS	FED. AID PROJECT		