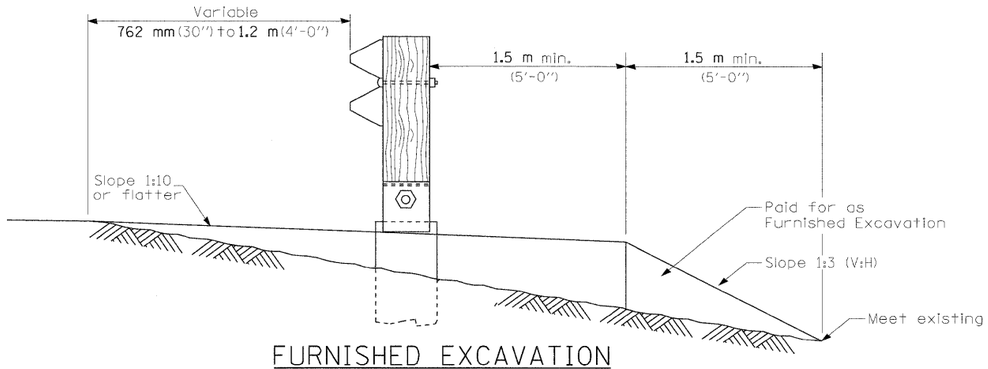

FURNISHED EXCAVATION

NOTE:

1. SEE DETAIL ON SHEET DET-01 FOR GUARDRAIL STABILIZATION

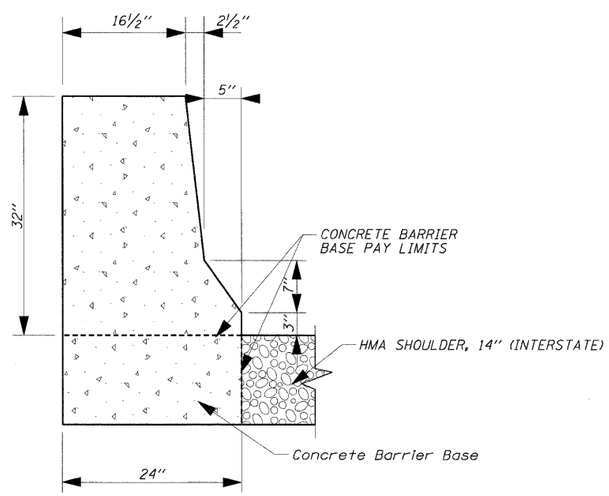

CONCRETE BARRIER, SINGLE FACE, 32" HEIGHT WITH HMA SHOULDER SLAB

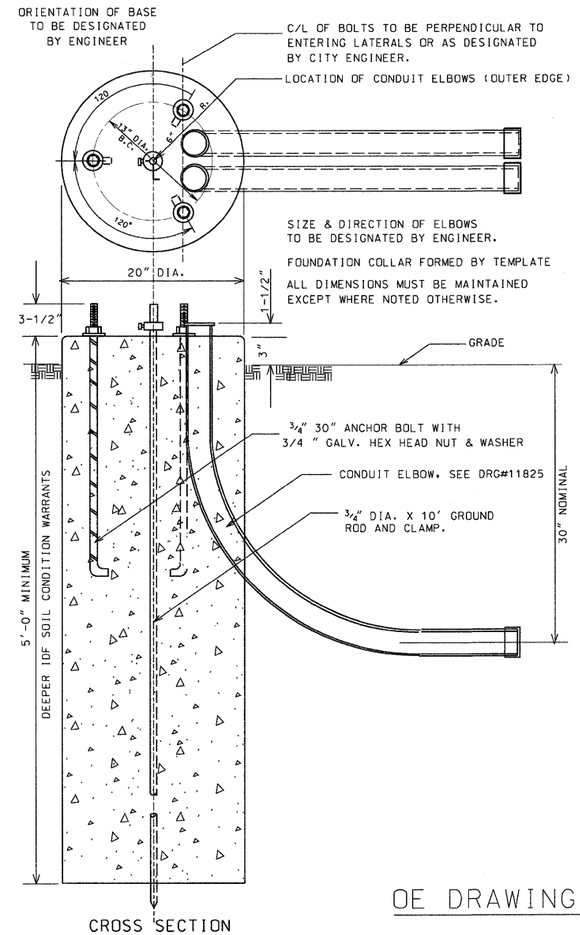

OE DRAWING 709

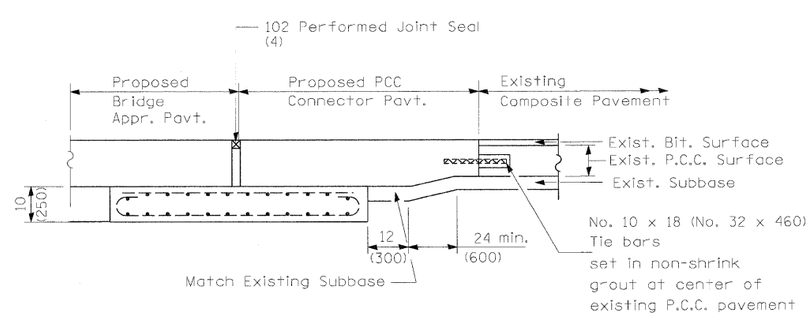

CONNECTOR PAVEMENT SECTION

DET-01

FILE NAME = pt_2008\cl\15802\Cadd\Sheet\Civil Details.dgn		DESIGNED -	REVISED -	STATE OF ILLINOIS DEPARTMENT OF TRANSPORTATION	F.A.P. 392 FRANKLIN CONNECTOR (AT 26th STREET AND AT I-55 FRONTAGE ROAD B)					
JE JACOBS		DRAWN -	REVISED -		CIVIL AND APPROACH SLAB DETAILS					
		CHECKED -	REVISED -							
	PLOT DATE = 1/12/2009	DATE - 01/13/09	REVISED -		SCALE: NONE	SHEET NO. OF SHEETS	STA.	TO STA.		

F.A.P RTE.	SECTION	COUNTY	TOTAL SHEETS	SHEET NO.
392	1717.2-3B-R	COOK	114	27
CONTRACT NO. 62197				
FED. ROAD DIST. NO.	ILLINOIS	FED. AID PROJECT		