F.A.I. RTE.	SECTION	COUNTY	TOTAL SHEETS	SHEET NO.
57	2021.1B-R	COOK	101	085
STA.		TO STA.		
FED. ROAD DIST. NO. 1	ILLINOIS	FED. AID PROJECT		

CONTRACT NO. 62532

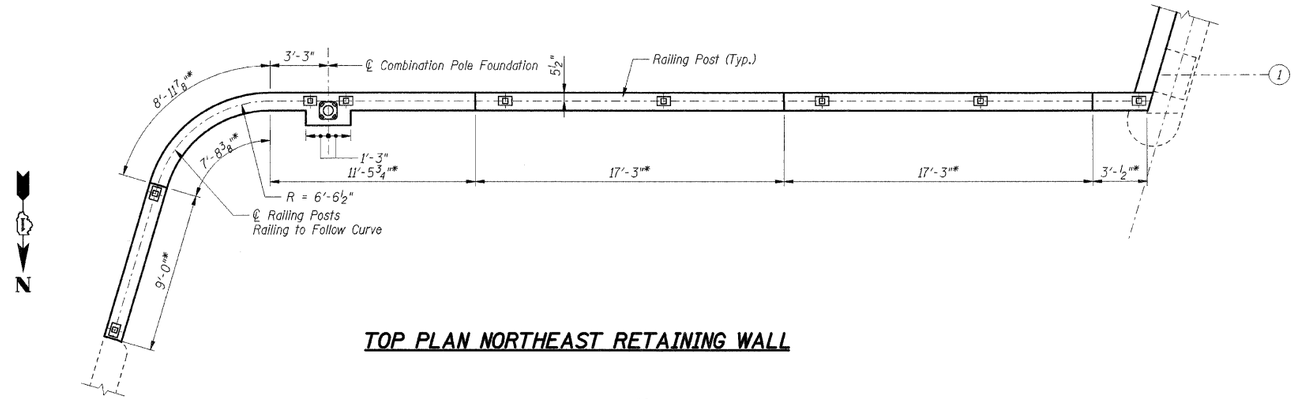

TOP PLAN NORTHEAST RETAINING WALL

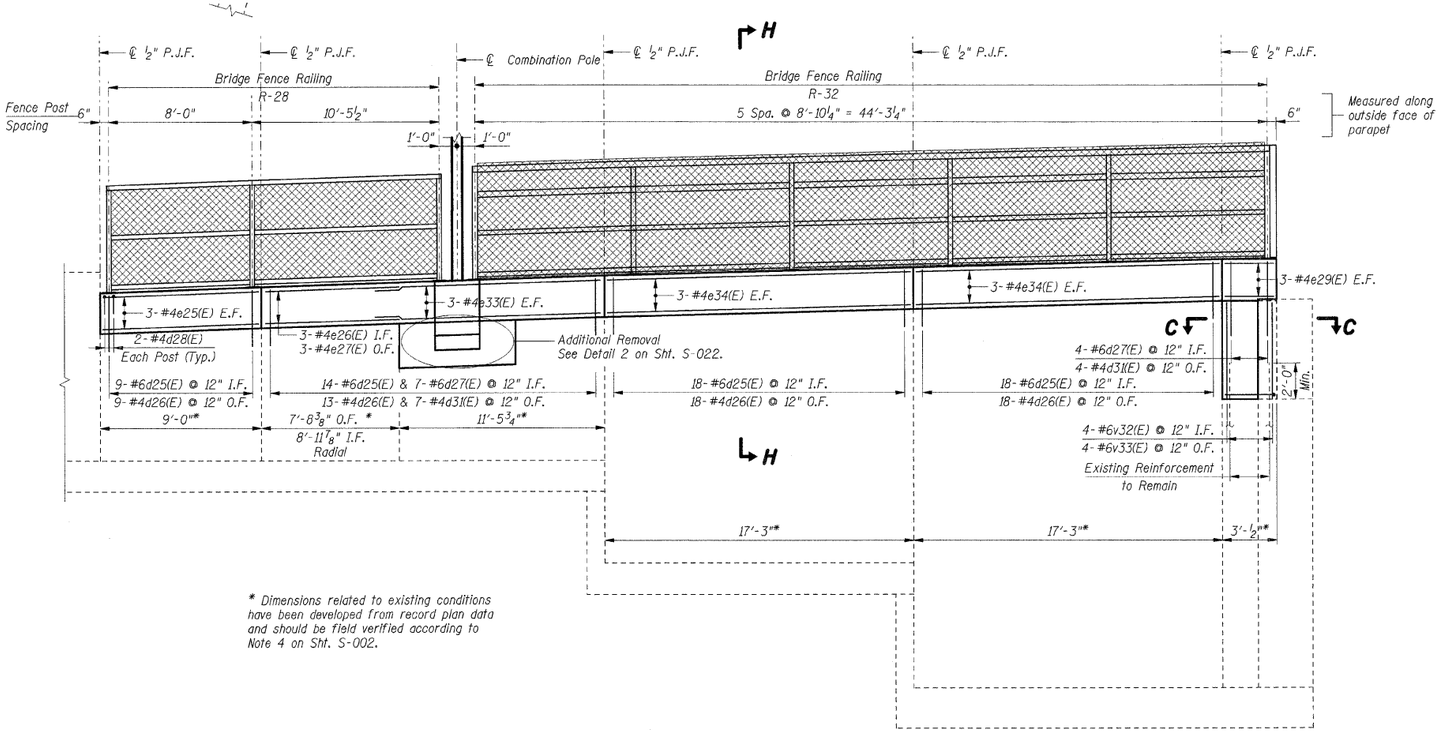

* Dimensions related to existing conditions have been developed from record plan data and should be field verified according to Note 4 on Sht. S-002.

DEVELOPED ELEVATION NORTHEAST RETAINING WALL

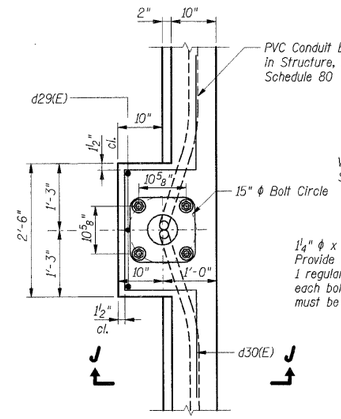

LIGHT & COMBINATION POLE FOUNDATION PLAN

(1 Thus Light Pole Foundation)
(1 Thus Combination Pole Foundation)

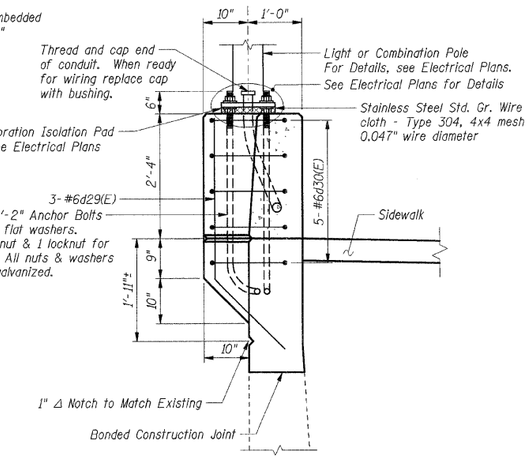

SECTION J-J

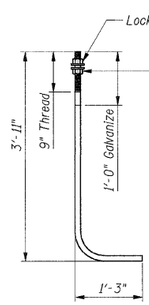

1¼" ANCHOR BOLT

(ASTM F 1554 Grade 105)

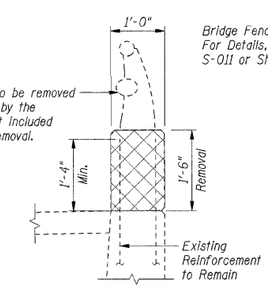

REMOVAL

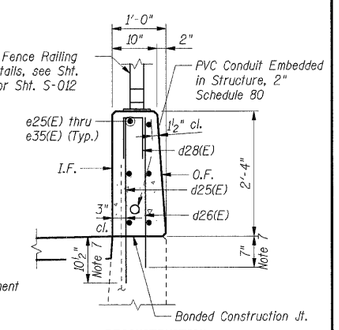

RECONSTRUCTION

SECTION H-H

Notes:

1. Work this sheet with Shts. S-020 & S-022.
2. Reinforcement bars designated (E) shall be epoxy coated.
3. Bars indicated thus 30 x 2-#5 etc. indicates 30 lines of bars with 2 lengths per line.
4. All edges shall have standard ¾" chamfers except as noted.
5. I.F. indicates Inside Face
   O.F. indicates Outside Face
   B.F. indicates Back Face
6. Existing reinforcement bars to remain shall be cleaned and incorporated into new construction with a minimum projection length as shown. Bars with insufficient projection or with 10% or more section loss shall be removed flush to the concrete removal line and replaced in kind by drilling and grouting new bars of equivalent size, the cost of which is included with Concrete Removal.
7. Reinforcement bars shall be epoxy grouted in accordance with Section 584 of the Standard Specifications. The grout and method of application shall be approved by the Department. Cost included with Reinforcement Bars, Epoxy Coated.

LEGEND

Concrete Removal

LAP LENGTHS	
Bar Size	Min. Lap
#4	1'-11"
#5	1'-8"
#6	2'-0"

SHT. S-021

REVISIONS	
NAME	DATE

ILLINOIS DEPARTMENT OF TRANSPORTATION
F.A.I. ROUTE 57 (INTERSTATE 57)
111TH STREET BRIDGE DECK REPLACEMENT
111th STREET OVER I-57
SN 016-0989 STA. 556+99.89
COOK COUNTY

EAST ABUTMENT DETAILS

DATE: 01/16/09
DRAWN BY: TMH
CHECKED BY: JLR

TENG
TENG & ASSOCIATES, INC.
ENGINEERS/ARCHITECTS/PLANNERS
205 N. MICHIGAN AVE., CHICAGO, IL 60601
TELEPHONE: 312.616.0000

..\BRBORDER.DGN,..\ABT00L-LDGN,..\ABT00L-LDGN,..\ABT00L-LDGN,..\ABT00L-LDGN,..\ABT00L-LDGN RITCHIJL
T:\DOCUMENT\930860\STRUCT\DGN\ABT00LM3.DGN color table: K:\STANDARD\TENG\DATA\COLORTABLE.TBL
pen table: N/A
1-16-2009, 15:59