CONTRACT NO. 70527

F.A.I. RTE.	SECTION	COUNTY	TOTAL SHEETS	SHEET NO.
74	(74,10-4,1)RS-1	*	69	39

* PIATT & CHAMPAIGN

70 MPH (110 km/h) DESIGN - 70' (21 m) MEDIAN

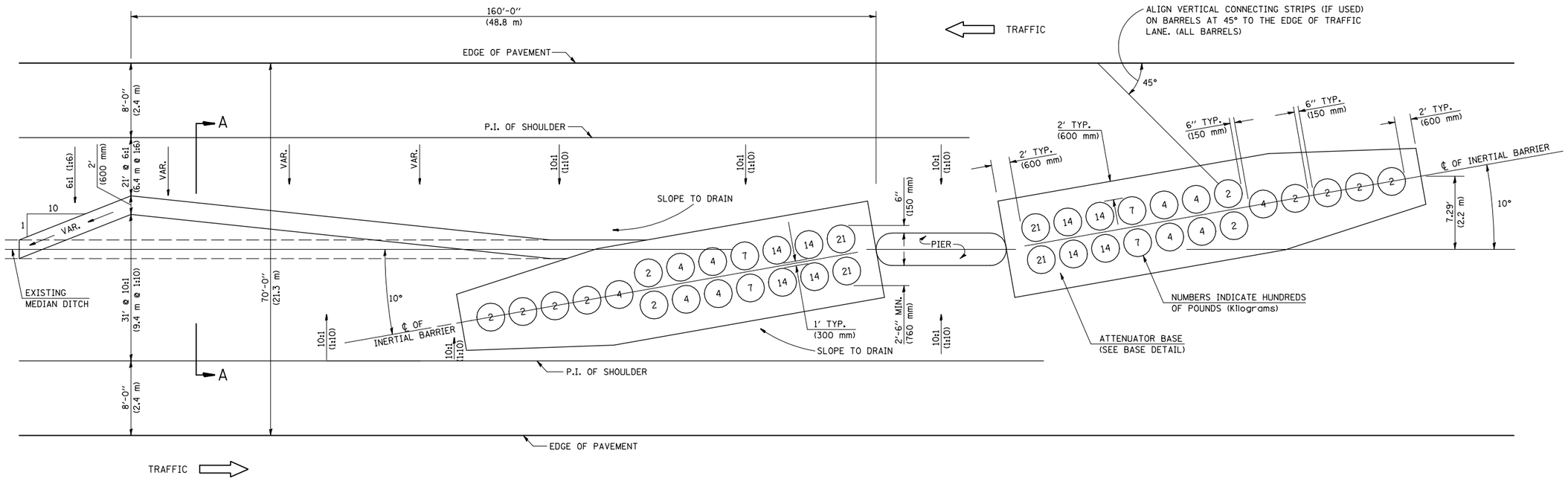

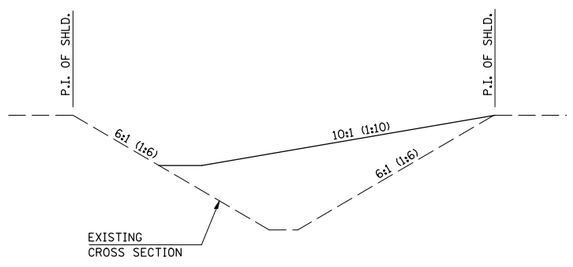

SECTION A-A
GRADING AND SHAPING DETAIL

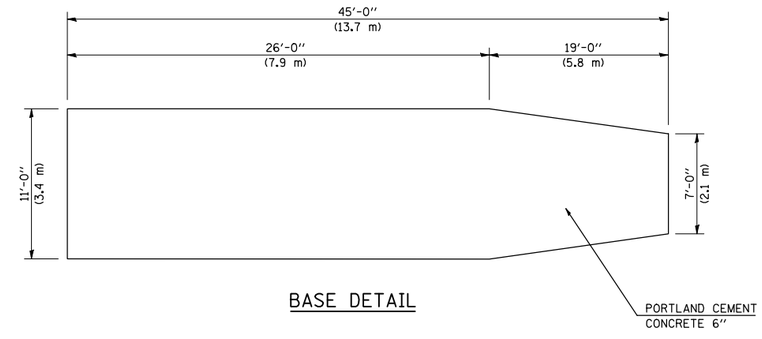

BASE DETAIL

GENERAL NOTES

1. ALL 10:1 (1:10) SLOPES SHOWN ON THIS DETAIL SHALL BE CONSTRUCTED 10:1 (1:10) OR FLATTER.
2. THE SLOPES AS SHOWN ON THIS DETAIL SHALL APPLY TO BOTH ENDS OF THE BRIDGE PIERS.
3. THE LENGTH X WIDTH OF MODULE LAYOUT IS 41.0' x 7.0': 19 MODULES - 14,400 LBS. (12.5 m x 2.1 m : 19 MODULES - 6532 kg).
4. IN AREAS OF 10:1 (1:10) SLOPES PRECEDING THE ATTENUATOR IN THE MEDIAN INSTALLATION, FOUR OR MORE WOOD POSTS SHALL BE PLACED AT 5' (1.5 m) INTERVALS IN THE MEDIAN ℄. SEE SPECIAL PROVISIONS AND SCHEDULES.

Note: All dimensions are in INCHES (millimeters) unless otherwise shown.

DATE	REVISIONS	NAME
11/06	REPLACED DETAIL F-1.52A	TJB

ILLINOIS DEPARTMENT OF TRANSPORTATION

IMPACT ATTENUATORS
(NON-REDIRECTIVE)
TEST LEVEL 3

DISTRICT 5 DETAIL NO. Z0030150F

DESIGNER NOTE: SEE BDE PROCEDURE MEMORANDUM 34-06

PLOT DATE = 2/5/2009
FILE NAME = c:\pw_work\PWIDOT\SHERERJM\dms88088\70527DETAILS.DGN
PLOT SCALE = 42.3529 ' / IN.
USER NAME = shererjm