64647
2.29

LIGHT POLE MOUNTING HEIGHT	BOLT CIRCLE DIAMETER	STEEL FOUNDATION SHAFT DIAMETER	STEEL FOUNDATION SHAFT DEPTH	CONCRETE FOUNDATION SHAFT DIAMETER	CONCRETE FOUNDATION SHAFT DEPTH	CONCRETE FOUNDATION ANCHOR ROD LENGTH *
≤9.1 m (30')	292 mm (11½")	220 mm (8⅝")	1.83 m (6'-0")	610mm (24")	1.52 m (5'-0")	1.45 m (4'-9")
9.4 m - 10.7 m (31'-35')	292 mm (11½")	220 mm (8⅝")	1.83 m (6'-0")	610mm (24")	1.67 m (5'-6")	1.60 m (5'-3")
10.9 m - 12.2 m (36'-40')	381 mm (15")	220 mm (8⅝")	1.83 m ** (6'-0")	610mm (24")	1.83 m (6'-0")	1.75 m (5'-9")
12.5 m - 13.7 m (41'-45')	381 mm (15")	220 mm (8⅝")	1.83 m ** (6'-0")	610mm (24")	1.98 m (6'-6")	1.90 m (6'-3")
14.0 m - 15.2 m (46'-50')	381 mm (15")	220 mm (8⅝")	2.44 m (8'-0")	610mm (24")	2.13m (7'-0")	2.00 m (6'-9")

* Length does not include 100 (4) hook
** 220 mm x 2.44 m (8⅝"x 8'-0") for Twin luminaires

Notes:

All foundations are designed to be located on slopes not exceeding 2:1 where soils have an unconfined compressive strength of at least 1.0 TSF. The contractor shall verify the soil strength during drilling for concrete foundations or by monitoring installation resistance on steel foundations and notify the engineer if other conditions are encountered.

Notes:

Wireway may be on front, back, or side of foundation as required by the trenching. Place door of transformer base on wireway side to minimize the number of unit duct bends.

Top of schedule 40 PVC 125 (5) I.D. PVC wiring window, shall be flush with the top of foundation for drainage.

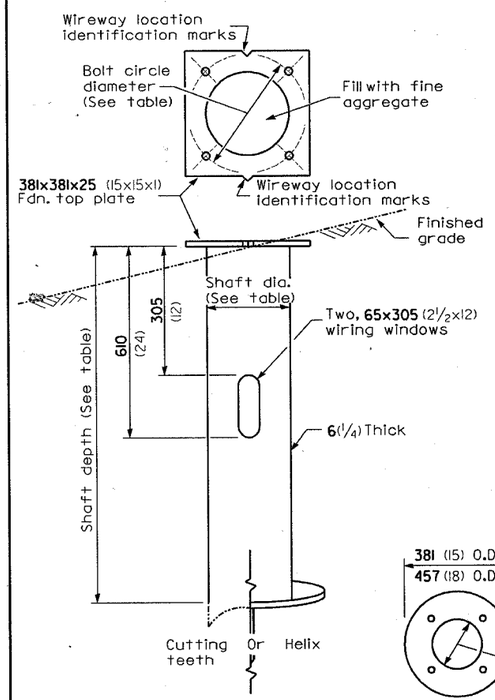

STEEL FOUNDATION

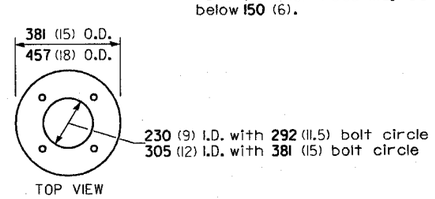

TOP VIEW

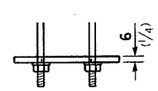

RING PLATE DETAIL

(When rock is encountered and foundation is shallower)

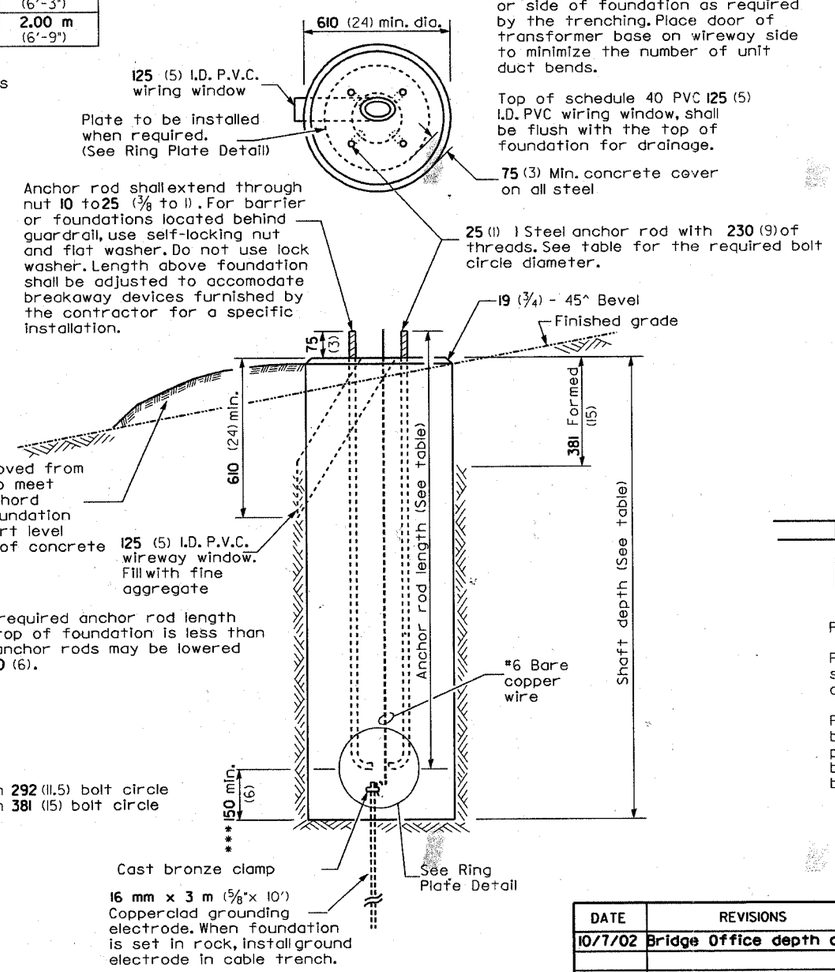

*** If the required anchor rod length above top of foundation is less than 75 (3), anchor rods may be lowered below 150 (6).

CONCRETE FOUNDATION

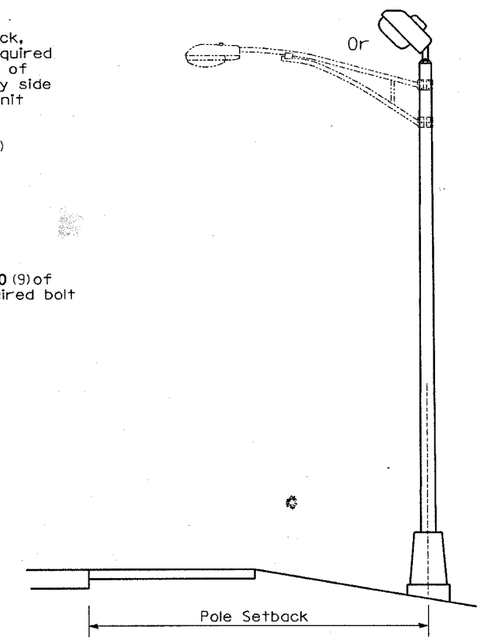

Pole Foundation Setback:

For horizontal mounted luminaires, setback shall be a minimum of 6.1m (20') from edge of pavement.

For vertical mount luminaires, setback shall be a minimum of 9 m (30') from edge of pavement. Poles shall be located 1.5 m (5') behind guardrail or other protective barriers, or as directed by the Engineer.

All dimensions are in millimeters (inches) unless otherwise shown.

DATE	REVISIONS
10/7/02	Bridge Office depth calc.

LIGHT POLE FOUNDATION

LGT007-836