CONTRACT NO. 64647

F.A.P. RTE.	SECTION	COUNTY	TOTAL SHEETS	SHEET NO.
595	1-3-K	ROCKISLAND	476	240D
STA.		TO STA.		
FED. ROAD DIST. NO.	ILLINOIS	FED. AID PROJECT		

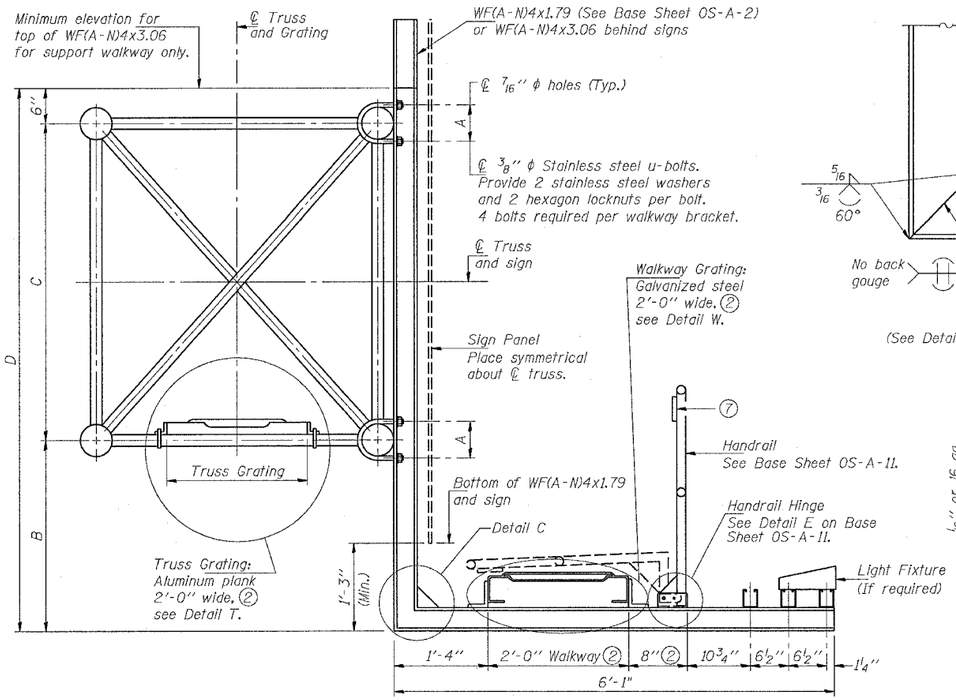

SECTION B-B

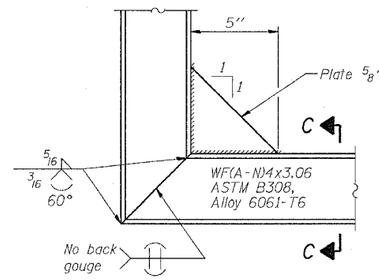

DETAIL C

(See Detail P, on Base Sheet OS-A-11.)

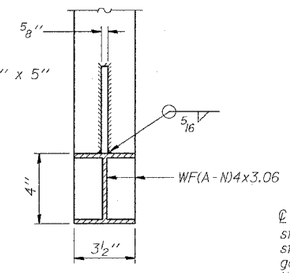

SECTION C-C

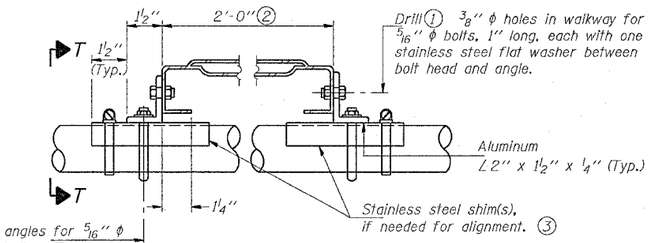

℄ 3/8" ϕ holes in angles for 5/16" ϕ stainless steel u-bolts. Two stainless steel washers and hot dip galvanized steel nuts required per bolt. U-bolt and angle connections required at horizontals only.

DETAIL T

(Truss grating at horizontal)

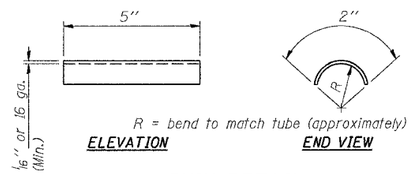

SHIM DETAIL

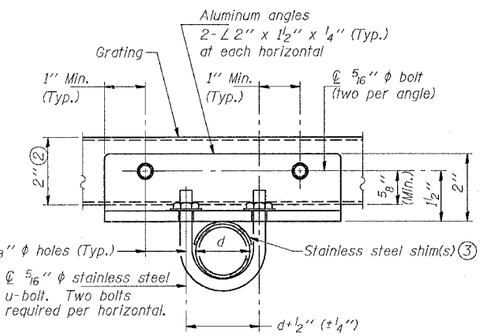

SECTION T-T

(Truss Grating Continuous)

d = outside diameter of horizontal

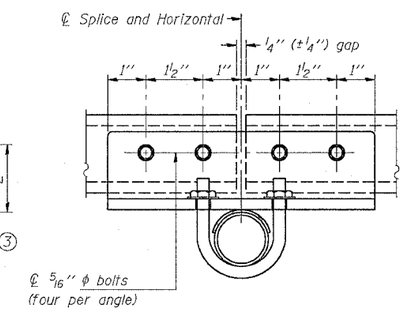

SECTION T-T

(Truss Grating Splice)

Details not shown same as Section T-T. Alternate splice details and locations may be used subject to the Engineer's review and approval.

℄ 3/8" ϕ holes for 5/16" ϕ steel bolts with two stainless steel washer and hexagon nut per bolt. (Typ.) Provide one per angle at continuous grating or two per angle at grating splices.

ALUMINUM TRUSS GRATING

Structure Number	Station	A	B	C	D
2S081NMB35900	359+00	6 3/8"	3' 4 1/2"	5' 3"	9' 1 1/2"
2S081NMB38150	381+50	7 3/8"	2' 4 1/2"	5' 3"	8' 1 1/2"

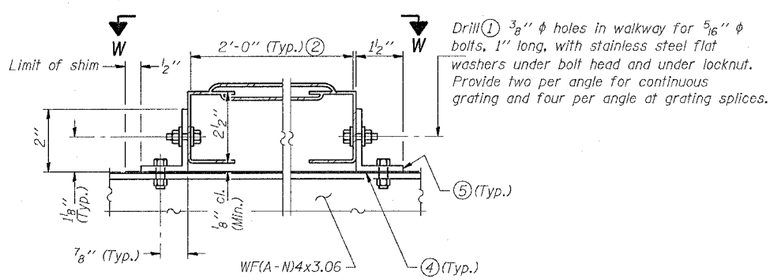

DETAIL W

GALVANIZED STEEL WALKWAY GRATING

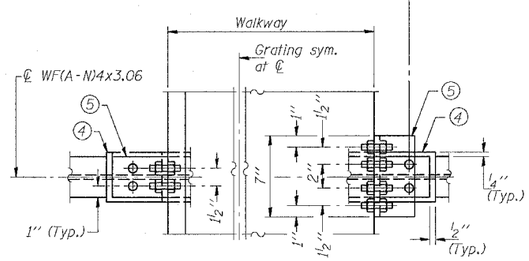

WALKWAY GRATING CONTINUOUS AT WALKWAY GRATING SPLICE

SECTION W-W

① Drilling holes in grating may be done in shop or field, based on Contractor's preference and subject to accurate alignment.

② Perforated or expanded metal grating providing a skid resistant (non-serrated) surface and capable of supporting a 500 pound concentrated load with a 6'-0" clear span. Walkway and truss grating dimensions are nominal and may vary (width ±½", depth ±½") based on available standard sizes. Cut ends of grating shall be free of burrs or hazardous projections and coated with zinc-rich primer or equivalent.

③ Stainless steel shims shall be placed under angles at horizontals and horizontal diagonals if needed to compensate for alignment variations and differences in horizontal diagonal pipe sizes beyond adjustment provided by angles. Secure with one stainless steel clamp per location, see "Shim Detail". Thicker shim plates may be used when needed subject to shims performing properly.

④ 1/16" (or 16 ga.) x 2½" x 4" stainless steel shim adhered to top of WF(A-N)4x3.06 beneath each galvanized angle. Adhesives for shims shall be suitable for materials joined and full exposure conditions.

⑤ Galvanized steel ∠ 2" x 1½" x ¼", 3½" long with continuous grating, 7½" long at grating splice.

⑥ Details shown are considered equal alternatives to the Aluminum Walkway on Base Sheet OS-A-10 and may be substituted by Contractor at no change in contract cost.

⑦ PL ⅛" x ½" x 2" welded to handrail posts to protect locations that contact grating.

NUMBER	REVISION	DATE

OVERHEAD SIGN STRUCTURES
ALTERNATE WALKWAY DETAILS

REVISIONS NAME	DATE

ILLINOIS DEPARTMENT OF TRANSPORTATION

SCALE: VERT. HORIZ.
DATE
DRAWN BY
CHECKED BY

OS-A-10S 11/1/2002

PLOT DATE = Wed Jan 26 07:32:18 2005
FILE NAME = c:\projects\64647\sheets\sign sheets.dgn
PLOT SCALE = 20.0000 ' / IN.
REFERENCE = REF