CONTRACT NO. 64647

F.A.P. RTE.	SECTION	COUNTY	TOTAL SHEETS	SHEET NO.
595	1-3-K	ROCK ISLAND	476	316
STA.		TO STA.		
FED. ROAD DIST. NO. _	ILLINOIS	FED. AID PROJECT		

DISTRICT STANDARDS

INLET SPECIAL NO. 5

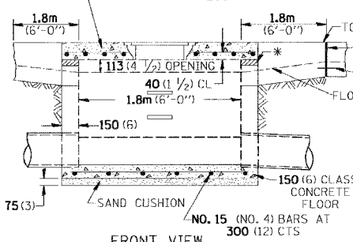

FRONT VIEW

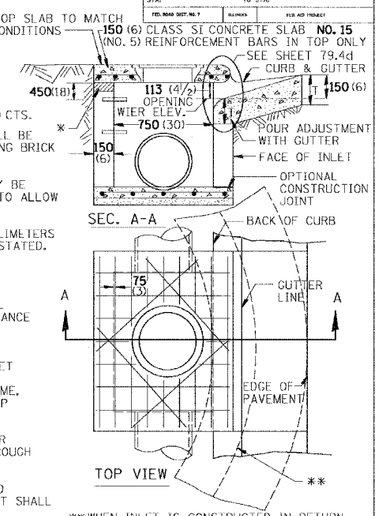

STEPS AT 300 (12) TO 400 (16) CTS.

* THE WALL ADJUSTMENTS SHALL BE MADE WITH CONCRETE BUILDING BRICK OR CLASS SI CONCRETE.

THE HEIGHT OF THE BOX MAY BE CONSTRUCTED 150 (6) SHORT TO ALLOW FOR FIELD ADJUSTMENTS.

ALL DIMENSIONS ARE IN MILLIMETERS (INCHES) UNLESS OTHERWISE STATED.

NOTES

25 (1) PREFORMED EXPANSION JOINTS AS SHOWN SHALL BE PROVIDED ON EACH SIDE OF INLET.

CLASS SI CONCRETE OR PRECAST CONCRETE SHALL BE USED THROUGHOUT.

THE SIDE WALLS MAY BE BUILT AS PRECAST SEGMENTAL SECTIONS.

STEPS SHALL BE OMITTED WHEN DEPTH OF INLET IS LESS THAN 1.5 m (5 FT.)

THE INLET SHALL BE CAST IN PLACE OR PRECAST.

EXCEPT AS NOTED HEREON INLET SPECIAL NO. 5 SHALL BE CONSTRUCTED IN ACCORDANCE WITH SECTION 602 OF THE STANDARD SPECIFICATIONS.

THE CONTRACT UNIT PRICE EACH FOR INLET SPECIAL NO. 5 SHALL INCLUDE THE COST OF FURNISHING AND INSTALLING THE FRAME, LID, REINFORCEMENT BARS, FLOOR AND TOP SLABS, CAST IRON STEPS (IF USED).

THE CURB AND GUTTER WILL BE PAID FOR SEPARATELY AND WILL BE MEASURED THROUGH THE INLET.

THE CURB AND GUTTER ADJACENT TO AND 1.8m (6 FT) ON EITHER SIDE OF THE INLET SHALL BE CONSTRUCTED AS SHOWN WITH NO ADDITIONAL COMPENSATION FOR THE TRANSITION.

SEE STANDARD 602701 FOR DETAILS OF STEPS.

** WHEN INLET IS CONSTRUCTED IN RETURN, THE TOP OF SLAB SHALL CONFORM TO THE RADIUS OF THE RETURN.

LIGHT WEIGHT MANHOLE CASTING

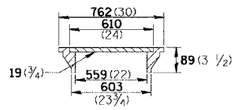

TOTAL WEIGHT 73Kg. (160 LBS.)

REVISED 11-10-94 79.4b

Tue Nov 04 09:53:02 2003
c:\pw_projects\dist\rock\p79b14.dgn

NOSE TYPE FOR INLET TOP SLAB

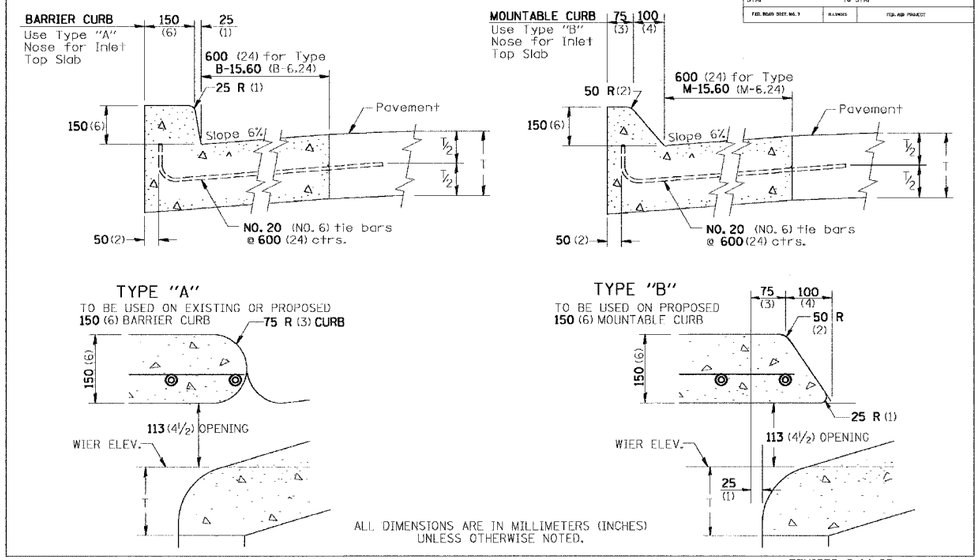

ALL DIMENSIONS ARE IN MILLIMETERS (INCHES) UNLESS OTHERWISE NOTED.

REVISED 2-14-95 79.4d

Tue Nov 04 09:53:02 2003
c:\pw_projects\dist\rock\p79b14.dgn

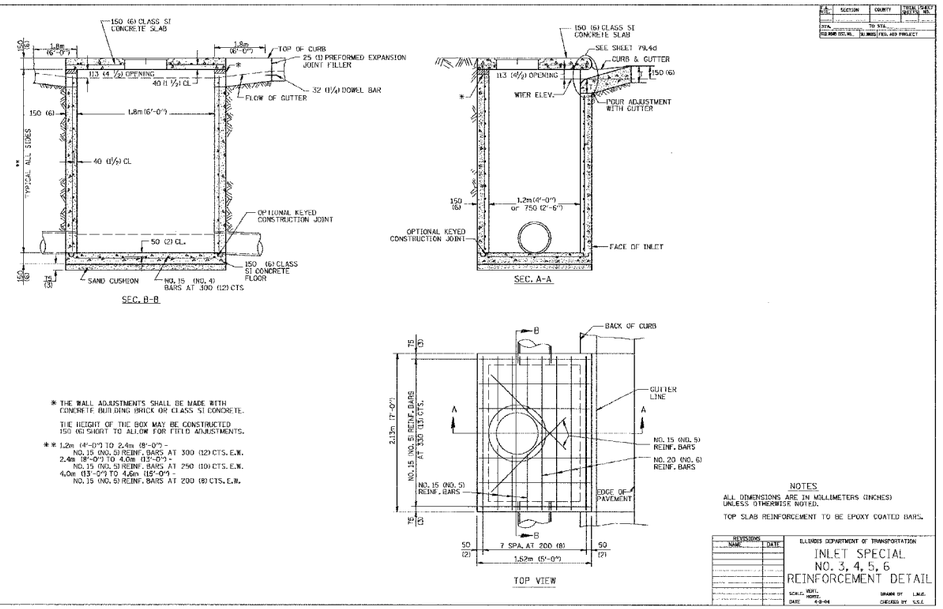

* THE WALL ADJUSTMENTS SHALL BE MADE WITH CONCRETE BUILDING BRICK OR CLASS SI CONCRETE.

THE HEIGHT OF THE BOX MAY BE CONSTRUCTED 150 (6) SHORT TO ALLOW FOR FIELD ADJUSTMENTS.

** 1.2m (4'-0") TO 2.4m (8'-0") - NO. 15 (NO. 5) REINF. BARS AT 300 (12) CTS. E.W.
2.4m (8'-0") TO 4.0m (13'-0") - NO. 15 (NO. 5) REINF. BARS AT 250 (10) CTS. E.W.
4.0m (13'-0") TO 4.6m (15'-0") - NO. 15 (NO. 5) REINF. BARS AT 200 (8) CTS. E.W.

NOTES

ALL DIMENSIONS ARE IN MILLIMETERS (INCHES) UNLESS OTHERWISE NOTED.

TOP SLAB REINFORCEMENT TO BE EPOXY COATED BARS.

REVISIONS NAME	DATE

ILLINOIS DEPARTMENT OF TRANSPORTATION
INLET SPECIAL NO. 3, 4, 5, 6 REINFORCEMENT DETAIL
SCALE: NOTE DATE 4-8-94 DRAWN BY L.M.E. CHECKED BY S.S.E.

79.4e

Tue Nov 04 09:53:03 2003
c:\pw_projects\dist\rock\p88b14.dgn

DRAIN FOR AGGREGATE BASES IN URBAN AREAS

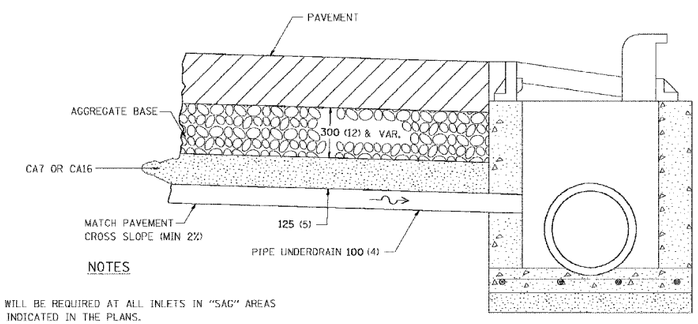

NOTES

DRAINS WILL BE REQUIRED AT ALL INLETS IN "SAG" AREAS AND AS INDICATED IN THE PLANS.

THIS WORK SHALL BE COMPLETED ACCORDING TO SECTION 601 OF THE STANDARD SPECIFICATIONS.

THIS WORK WILL BE PAID FOR AT THE CONTRACT UNIT PRICE PER METER (FOOT) FOR PIPE UNDERDRAINS OF THE DIAMETER SPECIFIED WHICH PRICE SHALL INCLUDE THE CA7 OR CA16 AND THE CONNECTION TO THE INLET.

ALL DIMENSIONS ARE IN MILLIMETERS (INCHES) UNLESS OTHERWISE NOTED.

REVISED 4-1-99 88.4