STORM SEWER SCHEDULE

STRUCTURE DATA							PIPE DATA		
NUMBER	STATION	OFFSET (FT.)	TYPE	DIAMETER (IN.)	RIM ELEV.	INVERT ELEV.	PAY LENGTH (FT.)	SIZE (IN.)	SLOPE (%)
K1	01+78.45	564.83 LT	Flared End Section	42	---	E 765.25			
							136.0	42.0	0.35
K2	01+96.01	418.63 LT	Manhole	84	772.33	W 765.72 E 765.82			
							106.5	42.0	0.35
K3	01+60.39	312.71 LT	Manhole	72	772.50	W 766.19 E 766.93			
							307.5	36.0	0.65
K4	01+60.50	0.00 LT	Manhole	84	774.37	W 768.92 N 770.05			
							167.5	18.0	0.39
K5	03+33.37	0.00 LT	Manhole	60	776.55	S 770.71 W 770.91 N 771.20			
							113.0	12.0	0.30
K6	04+50.02	0.00 LT	Inlet	24	775.60	S 771.54			
K5	03+33.37	0.00 LT	Manhole	60	776.55	S 770.71 N 771.20 W 770.91			
							148.5	15.0	0.30
K7	03+33.32	152.64 LT	Manhole	48	774.08	E 771.35			

UNDERDRAIN SCHEDULE

STRUCTURE DATA						PIPE DATA	
NUMBER	STATION	OFFSET (FT.)	TYPE	RIM ELEV.	INVERT ELEV.	PAY LENGTH (FT.)	SLOPE (%)
K4	03+33.37	0.00 LT	Manhole Connection	774.37	N 771.17		
						38.0	1.00
U1	01+98.05	4.00 RT	Inspection Hole	775.79	S 771.55		
				(U1 to U2)	W 771.55	29.0	0.40
				(U1 to U3)	E 771.55	73.0	0.50
				(U1 to U4)	N 772.67	41.5	2.00
U2	01+98.05	4.00 RT	Capped End	775.79	E 771.67		
U3	01+98.05	4.00 RT	Capped End	775.79	W 771.91		
U4	01+98.05	4.00 RT	Slope Break	775.79	S 773.50		
					N 773.50	93.0	0.40
K5	03+33.37	0.00 LT	Manhole Connection	776.55	S 773.13		
					N 773.13	106.0	0.40
U5	04+39.52	4.00 RT	Clean Out	776.58	S 773.55		

TRENCH DRAIN SCHEDULE

STRUCTURE DATA						PIPE DATA	
NUMBER	STATION	OFFSET (FT.)	TYPE	RIM ELEV.	INVERT ELEV.	PAY LENGTH (FT.)	SLOPE (%)
T1	02+49.37	5.17 LT	Trench Drain	776.27	S 775.18		
						56.0	1.00
K5	03+33.37	0.00 LT	Manhole Connection	776.55	N 774.42 S 774.34		
						56.0	1.00
T2	04+09.37	5.17 LT	Trench Drain	776.27	N 775.18		

NOTES

1. SEE SUPPLEMENTAL SPECIFICATIONS AND SPECIAL PROVISIONS FOR PIPE MATERIAL SPECIFICATIONS.
2. SEE DETAILS AND SUPPLEMENTAL SPECIFICATIONS AND SPECIAL PROVISIONS FOR TRENCH BACKFILL AND COMPACTION REQUIREMENTS.
3. STATIONS AND OFFSETS ARE GIVEN TO THE CENTER OF MANHOLES, CLEANOUTS, TO THE TOE OF THE FLARED END SECTION, AND TO THE CENTERLINE OF TRENCH DRAINS.
4. STRUCTURE K1 TO BE RESTRICTED WITH A 15" RESTRICTOR PIPE, COST INCIDENTAL TO PIPE, SEE DETAIL.
5. ADJUSTING RINGS: 12" MAXIMUM, NO MORE THAN 3 RINGS ALLOWED.
6. SEE DETAILS FOR ADDITIONAL STRUCTURE AND FLARED END SECTION INFORMATION.
7. REFER TO DRAINAGE STRUCTURE DATA TABLE FOR FRAME AND LID INFORMATION.
8. TRENCH DRAIN SLOPES BASED ON DISTANCE FROM T1 AND T2, RESPECTIVELY, TO MANHOLE K5.

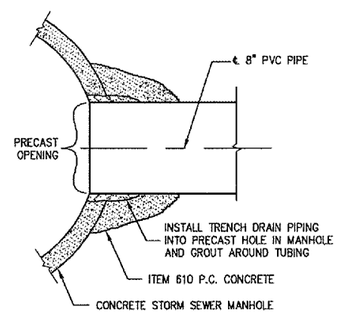

NOTES

1. HOLE FOR TRENCH DRAIN PIPING TO BE PRECAST INTO MANHOLE AT ELEVATION SPECIFIED IN TRENCH DRAIN SCHEDULE.
2. CONNECTIONS INCIDENTAL TO UNDERDRAIN.

TRENCH DRAIN CONCRETE COLLAR AND GROUT CONNECTION

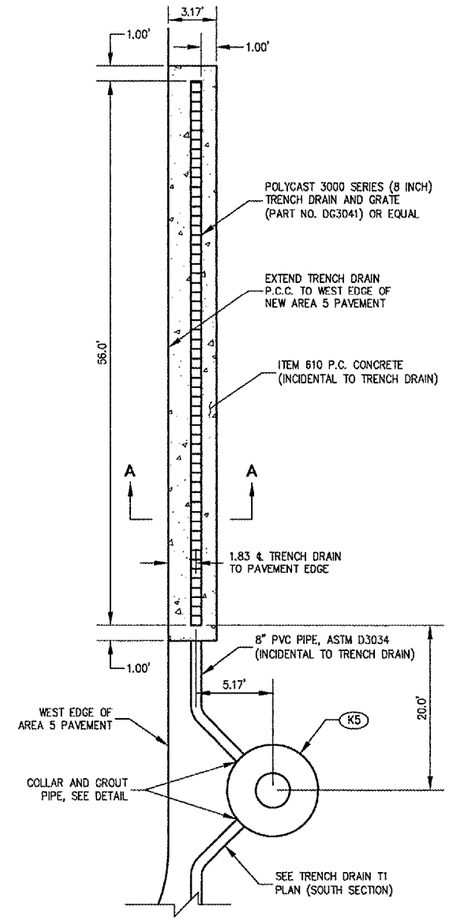

PLAN

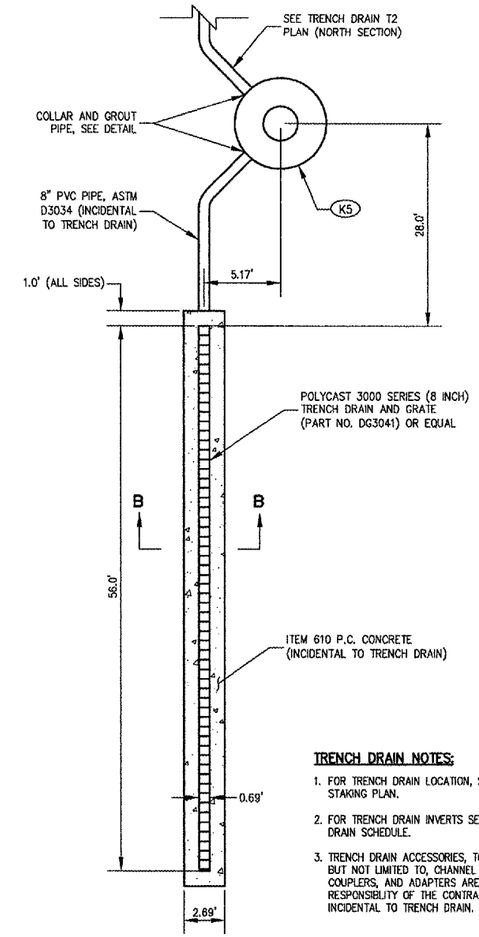

PLAN

TRENCH DRAIN NOTES:

1. FOR TRENCH DRAIN LOCATION, SEE STAKING PLAN.
2. FOR TRENCH DRAIN INVERTS SEE TRENCH DRAIN SCHEDULE.
3. TRENCH DRAIN ACCESSORIES, TO INCLUDE BUT NOT LIMITED TO, CHANNEL FRAMES, COUPLERS, AND ADAPTERS ARE THE RESPONSIBILITY OF THE CONTRACTOR AND INCIDENTAL TO TRENCH DRAIN.

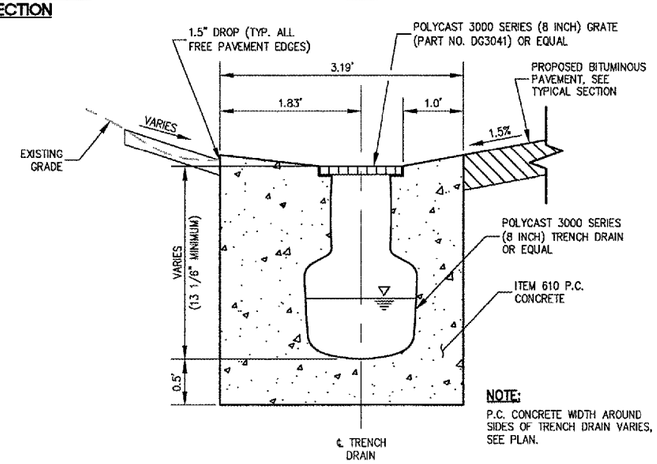

NOTE:
P.C. CONCRETE WIDTH AROUND SIDES OF TRENCH DRAIN VARIES, SEE PLAN.

SECTION A–A

TRENCH DRAIN T2 (NORTH OF MANHOLE K5)

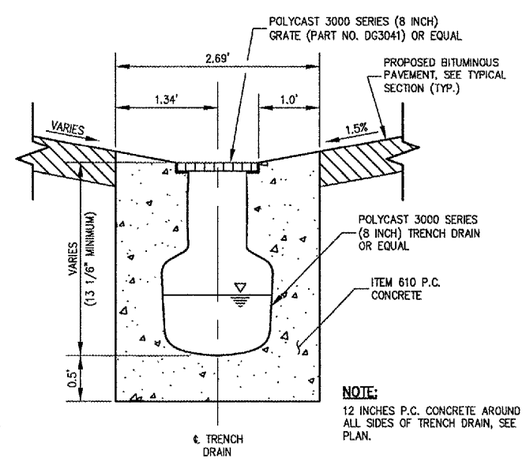

NOTE:
12 INCHES P.C. CONCRETE AROUND ALL SIDES OF TRENCH DRAIN, SEE PLAN.

SECTION B–B

TRENCH DRAIN T1 (SOUTH OF MANHOLE K5)

HANSON

HANSON PROFESSIONAL SERVICES INC.
815 Commerce Drive Suite 200
Oak Brook, Illinois 60523
Telephone: 630.990.3800
Fax: 630.990.3801

City of Dixon

CITY OF DIXON, ILLINOIS
Post Office Box 386
Dixon, Illinois 61021
Telephone: 815.288.1485

DIXON MUNICIPAL AIRPORT
CHARLES R. WALGREEN FIELD
OVERLAY RUNWAY 8-26,
REHABILITATE HANGAR PAVEMENTS

AIP PROJECT NO. 3-17-0036-B5
IDA PROJECT NO. C73-3313

No.	Drawing Issue Description	Date	By

Date
12 MARCH 2004

Sheet Title
UTILITY SCHEDULES AND TRENCH DRAIN DETAILS

84303B8004/C8005
Project Number
KLK 01/05/04
Layout By Date
TMM 01/09/04
Designed By Date
RMH 03/05/04
Reviewed By Date
KLK | TMM | ---
Drawn By

I:\DJOBS\00943\03B8004\DRAWINGS\SHEETS\65-STORM & UNDERDRAIN SCHEDULES.DWG MAR 12, 2004 8:48AM RJT