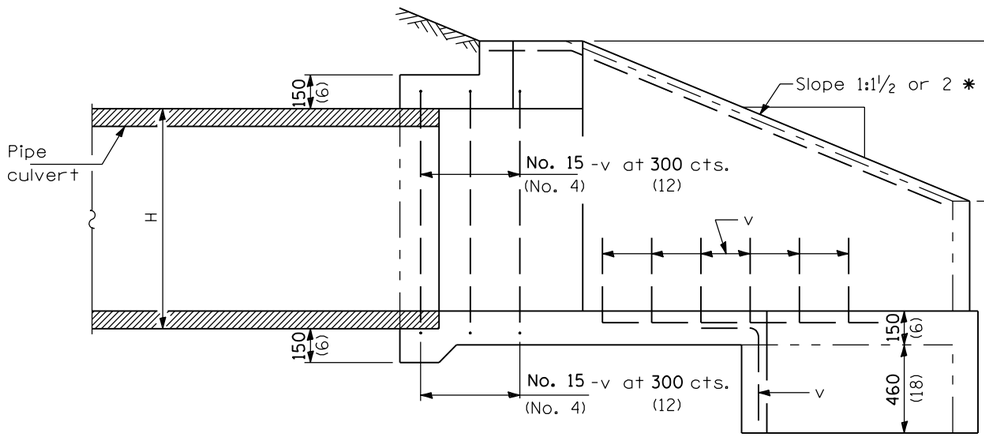


SECTION A-A

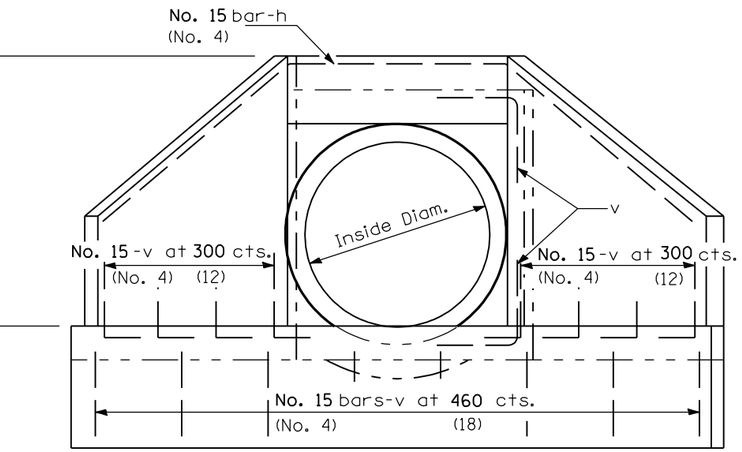


END VIEW

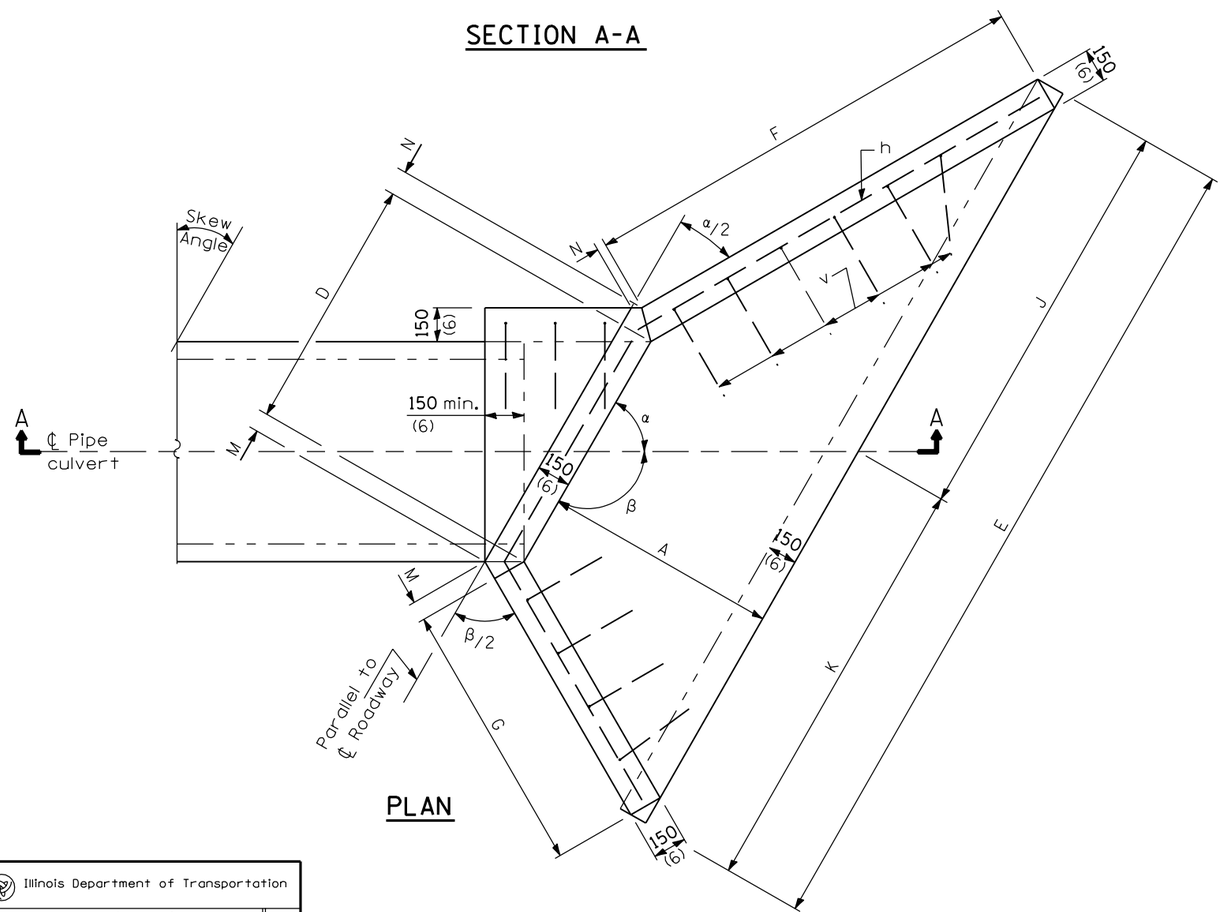


PLAN

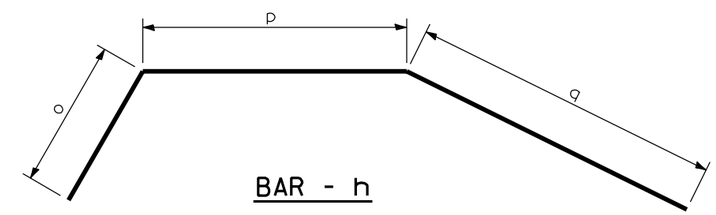


BAR - h

Bent in field
one required for each headwall

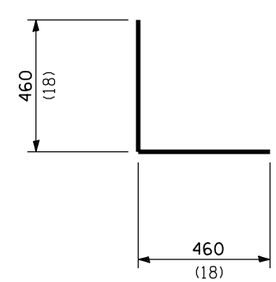


BAR - v

## GENERAL NOTES

Build tops of headwalls parallel to grade line.

* If embankment slope above headwall is flatter than 1:2, provide wings for 1:2 slope.

All slope ratios are expressed as units of vertical displacement to units of horizontal displacement (V:H).

All dimensions are in millimeters (inches) unless otherwise shown.

Illinois Department of Transportation

APPROVED January 1, 1997
Ralph E. Anderson
ENGINEER OF BRIDGES AND STRUCTURES

APPROVED January 1, 1997
Gary Hankel
ENGINEER OF DESIGN AND ENVIRONMENT

ISSUED 1-1-97

| DATE | REVISIONS |
|---|---|
| 1-1-97 | Renum. Standard 2051-2. |
| | Deleted DN Symbol. |
| | |
| 6-15-94 | Moved G.N. to Specs. |
| | Added slope note. |
| | Added Metric. |

**REINFORCED CONCRETE END SECTIONS FOR PIPE CULVERTS 375 mm (15") THRU 900 mm (36") DIA. SKEWED WITH ROADWAY**

(Sheet 1 of 5)

**STANDARD 542201**

# WINGS FOR 1:1½ SLOPE

| Skew Angle | Design No. | Nominal Dia. For Pipe | DIMENSIONS FOR CONCRETE A | B | C | D | E | F | G | H | J | K | M | N | α | Concrete 2 End Secs. m3 (yd3) | Reinf. Bars - 2 End Secs. h - bars o | p | q | Lgth. | v-bars No. | Bars 2 End Secs. kg (lbs) |
|---|---|---|---|---|---|---|---|---|---|---|---|---|---|---|---|---|---|---|---|---|---|---|
| 5° | DS 375-1½ (DS 15-1½) | 375 (15) | 720 (28) | 260 (10) | 740 (29) | 485 (19) | 2.15 m (6′-11¾″) | 1.07 m (3′-5½″) | 980 (38) | 483 (19) | 1.07 m (3′-5¾″) | 1.08 m (3′-6″) | 70 (2¾) | 60 (2¼) | 85° | 1.1 (1.4) | 1.01 m (3′-6″) | 551 (21) | 1.09 m (3′-9″) | 2.65 m (9′-0″) | 28 | 45 (70) |
| | DS 450-1½ (DS 18-1½) | 450 (18) | 720 (28) | 330 (13) | 810 (32) | 561 (22) | 2.22 m (7′-2¾″) | 1.07 m (3′-5½″) | 980 (38) | 559 (22) | 1.11 m (3′-7¼″) | 1.11 m (3′-7½″) | 70 (2¾) | 60 (2¼) | 85° | 1.2 (1.6) | 1.03 m (3′-6″) | 626 (24) | 1.12 m (3′-9″) | 2.78 m (9′-3″) | 28 | 45 (70) |
| | DS 600-1½ (DS 24-1½) | 600 (24) | 870 (34) | 410 (16) | 990 (39) | 765 (30) | 2.73 m (8′-10¾″) | 1.29 m (4′-2¼″) | 1.18 m (3′-10″) | 762 (30) | 1.36 m (4′-5¼″) | 1.37 m (4′-5½″) | 70 (2¾) | 60 (2¼) | 85° | 1.7 (2.2) | 1.23 m (4′-3″) | 832 (32) | 1.33 m (4′-7″) | 3.39 m (11′-6″) | 32 | 52 (80) |
| | DS 750-1½ (DS 30-1½) | 750 (30) | 990 (39) | 480 (19) | 1140 (3′-9″) | 917 (36) | 3.12 m (10′-3″) | 1.47 m (4′-9¾″) | 1.35 m (4′-5″) | 914 (36) | 1.56 m (5′-1¼″) | 1.56 m (5′-1¾″) | 70 (2¾) | 60 (2¼) | 85° | 2.1 (2.7) | 1.39 m (4′-10″) | 983 (39) | 1.51 m (5′-2″) | 3.88 m (13′-3″) | 36 | 58 (90) |
| | DS 900-1½ (DS 36-1½) | 900 (36) | 1140 (3′-9″) | 560 (22) | 1320 (4′-4″) | 1123 (3′-8¼″) | 3.63 m (11′-11″) | 1.69 m (5′-6½″) | 1.55 m (5′-1″) | 1.119 m (3′-8″) | 1.81 m (5′-11¼″) | 1.82 m (5′-11¾″) | 70 (2¾) | 60 (2¼) | 85° | 2.5 (3.3) | 1.6 m (5′-7″) | 1.19 m (3′-11″) | 1.73 m (6′-0″) | 4.52 m (15′-6″) | 42 | 68 (100) |
| 10° | DS 375-1½ (DS 15-1½) | 375 (15) | 720 (28) | 260 (10) | 740 (29) | 490 (19¼) | 2.17 m (7′-0½″) | 1.12 m (3′-7½″) | 940 (36½) | 483 (19) | 1.08 m (3′-6″) | 1.09 m (3′-6½″) | 70 (2¾) | 60 (2¼) | 80° | 1.2 (1.5) | 972 (3′-4″) | 557 (22) | 1.14 m (3′-10″) | 2.67 m (9′-0″) | 28 | 45 (70) |
| | DS 450-1½ (DS 18-1½) | 450 (18) | 720 (28) | 330 (13) | 810 (32) | 568 (22¼) | 2.24 m (7′-3¾″) | 1.12 m (3′-7½″) | 940 (36½) | 559 (22) | 1.11 m (3′-7½″) | 1.13 m (3′-8¼″) | 70 (2¾) | 60 (2¼) | 80° | 1.2 (1.6) | 990 (3′-4″) | 633 (25) | 1.17 m (3′-10″) | 2.8 m (9′-3″) | 28 | 45 (70) |
| | DS 600-1½ (DS 24-1½) | 600 (24) | 870 (34) | 410 (16) | 990 (39) | 774 (30½) | 2.76 m (9′-0″) | 1.36 m (4′-5″) | 1.14 m (3′-8½″) | 762 (30) | 1.37 m (4′-5¾″) | 1.39 m (4′-6¼″) | 70 (2¾) | 60 (2¼) | 80° | 1.7 (2.2) | 1.18 m (4′-1″) | 841 (33) | 1.4 m (4′-8″) | 3.42 m (11′-6″) | 34 | 55 (80) |
| | DS 750-1½ (DS 30-1½) | 750 (30) | 990 (39) | 480 (19) | 1140 (3′-9″) | 928 (36½) | 3.15 m (10′-4¼″) | 1.54 m (5′-0¾″) | 1.3 m (4′-3″) | 914 (36) | 1.57 m (5′-1¾″) | 1.58 m (5′-2½″) | 70 (2¾) | 60 (2¼) | 80° | 2.1 (2.8) | 1.34 m (4′-9″) | 993 (39) | 1.58 m (5′-6″) | 3.92 m (13′-6″) | 36 | 59 (90) |
| | DS 900-1½ (DS 36-1½) | 900 (36) | 1140 (3′-9″) | 560 (22) | 1320 (4′-4″) | 1136 (3′-8¾″) | 3.67 m (12′-0½″) | 1.78 m (5′-10″) | 1.49 m (4′-10¾″) | 1.119 m (3′-8″) | 1.83 m (6′-0″) | 1.84 m (6′-0½″) | 70 (2¾) | 60 (2¼) | 80° | 2.7 (3.5) | 1.54 m (5′-6″) | 1.2 m (3′-11″) | 1.82 m (6′-4″) | 4.56 m (15′-9″) | 42 | 68 (110) |
| 15° | DS 375-1½ (DS 15-1½) | 375 (15) | 720 (28) | 260 (10) | 740 (29) | 500 (19¾) | 2.2 m (7′-2″) | 1.19 m (3′-10″) | 910 (35¼) | 483 (19) | 1.09 m (3′-6½″) | 1.11 m (3′-7½″) | 80 (3) | 50 (2) | 75° | 1.2 (1.5) | 942 (3′-4″) | 567 (22) | 1.2 m (4′-1″) | 2.71 m (9′-3″) | 28 | 45 (70) |
| | DS 450-1½ (DS 18-1½) | 450 (18) | 720 (28) | 330 (13) | 810 (32) | 579 (22¾) | 2.28 m (7′-5¼″) | 1.19 m (3′-10″) | 910 (35¼) | 559 (22) | 1.13 m (3′-8″) | 1.15 m (3′-9¼″) | 80 (3) | 50 (2) | 75° | 1.3 (1.7) | 965 (3′-4″) | 644 (25) | 1.23 m (4′-1″) | 2.84 m (9′-6″) | 28 | 45 (70) |
| | DS 600-1½ (DS 24-1½) | 600 (24) | 870 (34) | 410 (16) | 990 (39) | 789 (31) | 2.8 m (9′-2″) | 1.43 m (4′-7¾″) | 1.1 m (3′-6¾″) | 762 (30) | 1.39 m (4′-6½″) | 1.41 m (4′-7½″) | 80 (3) | 50 (2) | 75° | 1.8 (2.3) | 1.15 m (4′-0″) | 857 (34) | 1.47 m (4′-11″) | 3.47 m (11′-9″) | 34 | 55 (80) |
| | DS 750-1½ (DS 30-1½) | 750 (30) | 990 (39) | 480 (19) | 1140 (3′-9″) | 946 (37¼) | 3.21 m (10′-6½″) | 1.63 m (5′-4″) | 1.25 m (4′-1¼″) | 914 (36) | 1.59 m (5′-2¾″) | 1.62 m (5′-3¾″) | 80 (3) | 50 (2) | 75° | 2.2 (2.9) | 1.3 m (4′-8″) | 1.01 m (3′-4″) | 1.67 m (5′-9″) | 3.98 m (13′-9″) | 40 | 64 (100) |
| | DS 900-1½ (DS 36-1½) | 900 (36) | 1140 (3′-9″) | 560 (22) | 1320 (4′-4″) | 1158 (3′-9½″) | 3.73 m (12′-3¼″) | 1.87 m (6′-2″) | 1.44 m (4′-8¾″) | 1.119 m (3′-8″) | 1.85 m (6′-1″) | 1.88 m (6′-2¼″) | 80 (3) | 50 (2) | 75° | 2.9 (3.8) | 1.49 m (5′-3″) | 1.22 m (4′-0″) | 1.92 m (6′-6″) | 4.63 m (15′-9″) | 46 | 74 (110) |
| 20° | DS 375-1½ (DS 15-1½) | 375 (15) | 720 (28) | 260 (10) | 740 (29) | 514 (20¼) | 2.26 m (7′-4″) | 1.26 m (4′-0¾″) | 880 (34¼) | 483 (19) | 1.11 m (3′-7¼″) | 1.15 m (3′-8¾″) | 80 (3) | 50 (2) | 70° | 1.2 (1.6) | 916 (39) | 581 (23) | 1.27 m (4′-4″) | 2.77 m (9′-6″) | 28 | 45 (70) |
| | DS 450-1½ (DS 18-1½) | 450 (18) | 720 (28) | 330 (13) | 810 (32) | 595 (23½) | 2.34 m (7′-7½″) | 1.26 m (4′-0¾″) | 880 (34¼) | 559 (22) | 1.15 m (3′-9″) | 1.19 m (3′-10½″) | 80 (3) | 50 (2) | 70° | 1.3 (1.7) | 938 (39) | 661 (26) | 1.31 m (4′-4″) | 2.9 m (9′-9″) | 28 | 45 (70) |
| | DS 600-1½ (DS 24-1½) | 600 (24) | 870 (34) | 410 (16) | 990 (39) | 811 (32) | 2.87 m (9′-4½″) | 1.52 m (4′-11¼″) | 1.07 m (3′-5½″) | 762 (30) | 1.42 m (4′-7½″) | 1.45 m (4′-9″) | 80 (3) | 50 (2) | 70° | 1.8 (2.4) | 1.11 m (3′-11″) | 879 (35) | 1.56 m (5′-2″) | 3.55 m (12′-0″) | 38 | 61 (90) |
| | DS 750-1½ (DS 30-1½) | 750 (30) | 990 (39) | 480 (19) | 1140 (3′-9″) | 973 (38¼) | 3.29 m (10′-9¾″) | 1.73 m (5′-8″) | 1.21 m (3′-11½″) | 914 (36) | 1.63 m (5′-4¼″) | 1.66 m (5′-5½″) | 80 (3) | 50 (2) | 70° | 2.4 (3.1) | 1.26 m (4′-5″) | 1.04 m (3′-5″) | 1.77 m (5′-11″) | 4.07 m (13′-9″) | 42 | 67 (100) |
| | DS 900-1½ (DS 36-1½) | 900 (36) | 1140 (3′-9″) | 560 (22) | 1320 (4′-4″) | 1191 (3′-10¾″) | 3.86 m (12′-7″) | 1.99 m (6′-6½″) | 1.41 m (4′-7″) | 1.119 m (3′-8″) | 1.9 m (6′-2¾″) | 1.93 m (6′-4¼″) | 80 (3) | 50 (2) | 70° | 3.1 (4.0) | 1.45 m (5′-3″) | 1.26 m (4′-1″) | 2.03 m (6′-11″) | 4.73 m (16′-3″) | 50 | 80 (120) |
| 25° | DS 375-1½ (DS 15-1½) | 375 (15) | 720 (28) | 260 (10) | 740 (29) | 533 (21) | 2.33 m (7′-7″) | 1.34 m (4′-4″) | 860 (33¼) | 483 (19) | 1.14 m (3′-8½″) | 1.19 m (3′-10½″) | 90 (3¼) | 50 (1¾) | 65° | 1.2 (1.6) | 893 (39) | 600 (23) | 1.36 m (4′-7″) | 2.85 m (9′-9″) | 28 | 45 (70) |
| | DS 450-1½ (DS 18-1½) | 450 (18) | 720 (28) | 330 (13) | 810 (32) | 617 (24¼) | 2.42 m (7′-10¼″) | 1.34 m (4′-4″) | 860 (33¼) | 559 (22) | 1.19 m (3′-10¼″) | 1.23 m (4′-0″) | 90 (3¼) | 50 (1¾) | 65° | 1.4 (1.8) | 914 (38) | 683 (27) | 1.39 m (4′-7″) | 2.99 m (10′-0″) | 32 | 51 (80) |
| | DS 600-1½ (DS 24-1½) | 600 (24) | 870 (34) | 410 (16) | 990 (39) | 841 (33) | 2.97 m (9′-8½″) | 1.62 m (5′-3¼″) | 1.04 m (3′-4¼″) | 762 (30) | 1.46 m (4′-9¼″) | 1.51 m (4′-11¼″) | 90 (3¼) | 50 (1¾) | 65° | 1.9 (2.5) | 1.09 m (3′-10″) | 909 (35) | 1.66 m (5′-6″) | 3.65 m (12′-3″) | 38 | 61 (90) |
| | DS 750-1½ (DS 30-1½) | 750 (30) | 990 (39) | 480 (19) | 1140 (3′-9″) | 1008 (3′-3¾″) | 3.4 m (11′-2″) | 1.83 m (6′-0½″) | 1.18 m (3′-10¼″) | 914 (36) | 1.68 m (5′-6″) | 1.72 m (5′-8″) | 90 (3¼) | 50 (1¾) | 65° | 2.5 (3.3) | 1.23 m (4′-5″) | 1.08 m (3′-6″) | 1.88 m (6′-4″) | 4.18 m (14′-3″) | 44 | 71 (110) |
| | DS 900-1½ (DS 36-1½) | 900 (36) | 1140 (3′-9″) | 560 (22) | 1320 (4′-4″) | 1235 (4′-0½″) | 3.96 m (13′-0¼″) | 2.12 m (6′-11¾″) | 1.36 m (4′-5¼″) | 1.119 m (3′-8″) | 1.96 m (6′-5¼″) | 2 m (6′-7″) | 90 (3¼) | 50 (1¾) | 65° | 3.3 (4.3) | 1.41 m (5′-0″) | 1.3 m (4′-3″) | 2.16 m (7′-3″) | 4.87 m (16′-6″) | 50 | 80 (120) |
| 30° | DS 375-1½ (DS 15-1½) | 375 (15) | 720 (28) | 260 (10) | 740 (29) | 558 (22) | 2.43 m (7′-10¾″) | 1.44 m (4′-8″) | 830 (32¼) | 483 (19) | 1.19 m (3′-10¼″) | 1.24 m (4′-0½″) | 90 (3½) | 40 (1½) | 60° | 1.3 (1.7) | 873 (37) | 626 (24) | 1.46 m (4′-11″) | 2.95 m (10′-0″) | 36 | 57 (90) |
| | DS 450-1½ (DS 18-1½) | 450 (18) | 720 (28) | 330 (13) | 810 (32) | 645 (25½) | 2.52 m (8′-2¼″) | 1.44 m (4′-8″) | 830 (32¼) | 559 (22) | 1.23 m (4′-0″) | 1.29 m (4′-2¼″) | 90 (3½) | 40 (1½) | 60° | 1.5 (1.9) | 893 (38) | 712 (28) | 1.49 m (5′-0″) | 3.1 m (10′-6″) | 36 | 57 (90) |
| | DS 600-1½ (DS 24-1½) | 600 (24) | 870 (34) | 410 (16) | 990 (39) | 880 (34¾) | 3.1 m (10′-1¼″) | 1.74 m (5′-8″) | 1.01 m (3′-3¼″) | 762 (30) | 1.52 m (4′-11½″) | 1.58 m (5′-1¾″) | 90 (3½) | 40 (1½) | 60° | 2.1 (2.7) | 1.06 m (3′-9″) | 949 (37) | 1.78 m (5′-11″) | 3.79 m (12′-9″) | 40 | 64 (100) |
| | DS 750-1½ (DS 30-1½) | 750 (30) | 990 (39) | 480 (19) | 1140 (3′-9″) | 1055 (3′-5½″) | 3.55 m (11′-7¾″) | 1.98 m (6′-6″) | 1.15 m (3′-9″) | 914 (36) | 1.75 m (5′-8¾″) | 1.8 m (5′-11″) | 90 (3½) | 40 (1½) | 60° | 2.7 (3.5) | 1.2 m (4′-4″) | 1.12 m (3′-8″) | 2.02 m (6′-9″) | 4.34 m (14′-9″) | 46 | 74 (110) |
| | DS 900-1½ (DS 36-1½) | 900 (36) | 1140 (3′-9″) | 560 (22) | 1320 (4′-4″) | 1292 (4′-2¾″) | 4.13 m (13′-7″) | 2.28 m (7′-6″) | 1.32 m (4′-4″) | 1.119 m (3′-8″) | 2.04 m (6′-8½″) | 2.09 m (6′-10½″) | 90 (3½) | 40 (1½) | 60° | 3.5 (4.6) | 1.37 m (5′-0″) | 1.36 m (4′-5″) | 2.32 m (7′-10″) | 5.05 m (17′-3″) | 54 | 86 (130) |

All dimensions are in millimeters (inches) unless otherwise shown.

All slope ratios are expressed as units of vertical displacement to units of horizontal displacement (V:H).

Illinois Department of Transportation

APPROVED January 1, 1997
Ralph E. Anderson
ENGINEER OF BRIDGES AND STRUCTURES

APPROVED January 1, 1997
Gary Hankel
ENGINEER OF DESIGN AND ENVIRONMENT

ISSUED 1-1-97

REINFORCED CONCRETE END SECTIONS
FOR PIPE CULVERTS
375 mm (15″) THRU 900 mm (36″) DIA.
SKEWED WITH ROADWAY
(Sheet 2 of 5)

**STANDARD 542201**

# WINGS FOR 1:1½ SLOPE

| Skew Angle | Design No. | Nominal Dia. For Pipe | DIMENSIONS FOR CONCRETE A | B | C | D | E | F | G | H | J | K | M | N | α | Concrete 2 End Secs. m³ (yd³) | Reinf. Bars - 2 End Secs. h - bars o | p | q | Lgth. | v-bars No. | Bars 2 End Secs. kg (lbs) |
|---|---|---|---|---|---|---|---|---|---|---|---|---|---|---|---|---|---|---|---|---|---|---|
| 35° | DS 375-1½ (DS 15-1½) | 375 (15) | 720 (28) | 260 (10) | 740 (29) | 590 (23¼) | 2.55 m (8′-3¾″) | 1.56 m (5′-0¾″) | 820 (31½) | 483 (19) | 1.24 m (4′-0½″) | 1.31 m (4′-3″) | 90 (3¾) | 40 (1½) | 55° | 1.4 (1.8) | 855 (37) | 658 (26) | 1.57 m (5′-3″) | 3.09 m (10′-6″) | 36 | 57 (90) |
| | DS 450-1½ (DS 18-1½) | 450 (18) | 720 (28) | 330 (13) | 810 (32) | 682 (27) | 2.65 m (8′-7¼″) | 1.56 m (5′-0¾″) | 820 (31½) | 559 (22) | 1.29 m (4′-2¼″) | 1.36 m (4′-5″) | 90 (3¾) | 40 (1½) | 55° | 1.5 (2.0) | 876 (37) | 750 (29) | 1.61 m (5′-3″) | 3.24 m (10′-9″) | 36 | 57 (90) |
| | DS 600-1½ (DS 24-1½) | 600 (24) | 870 (34) | 410 (16) | 990 (39) | 930 (36½) | 3.26 m (10′-7¾″) | 1.88 m (6′-1¾″) | 980 (38¼) | 762 (30) | 1.6 m (5′-2½″) | 1.66 m (5′-5¼″) | 90 (3¾) | 40 (1½) | 55° | 2.2 (2.9) | 1.04 m (3′-8″) | 1.0 m (39) | 1.92 m (6′-4″) | 3.96 m (13′-3″) | 40 | 64 (100) |
| | DS 750-1½ (DS 30-1½) | 750 (30) | 990 (39) | 480 (19) | 1140 (3′-9″) | 1.116 m (3′-8″) | 3.74 m (12′-3¼″) | 2.15 m (7′-0½″) | 1.12 m (3′-8″) | 914 (36) | 1.84 m (6′-0¼″) | 1.9 m (6′-3″) | 90 (3¾) | 40 (1½) | 55° | 2.8 (3.7) | 1.17 m (4′-2″) | 1.18 m (3′-11″) | 2.18 m (7′-2″) | 4.54 m (15′-3″) | 50 | 80 (120) |
| | DS 900-1½ (DS 36-1½) | 900 (36) | 1140 (3′-9″) | 560 (22) | 1320 (4′-4″) | 1.366 m (4′-5¾″) | 4.35 m (14′-3¾″) | 2.47 m (8′-1½″) | 1.3 m (4′-2¾″) | 1.119 m (3′-8″) | 2.14 m (7′-0½″) | 2.21 m (7′-3¼″) | 90 (3¾) | 40 (1½) | 55° | 3.8 (4.9) | 1.34 m (4′-11″) | 1.43 m (4′-8″) | 2.51 m (8′-5″) | 5.29 m (18′-0″) | 56 | 90 (140) |
| 40° | DS 375-1½ (DS 15-1½) | 375 (15) | 720 (28) | 260 (10) | 740 (29) | 631 (24¾) | 2.71 m (8′-10″) | 1.71 m (5′-6¼″) | 780 (31) | 483 (19) | 1.32 m (4′-3½″) | 1.39 m (4′-6½″) | 100 (3¾) | 40 (1¼) | 50° | 1.5 (1.9) | 840 (37) | 700 (27) | 1.71 m (5′-8″) | 3.25 m (11′-0″) | 38 | 60 (90) |
| | DS 450-1½ (DS 18-1½) | 450 (18) | 720 (28) | 330 (13) | 810 (32) | 730 (28¾) | 2.81 m (9′-1¾″) | 1.71 m (5′-6¼″) | 780 (31) | 559 (22) | 1.37 m (4′-5½″) | 1.44 m (4′-8¼″) | 100 (3¾) | 40 (1¼) | 50° | 1.7 (2.2) | 860 (36) | 798 (31) | 1.76 m (5′-8″) | 3.41 m (11′-3″) | 38 | 61 (90) |
| | DS 600-1½ (DS 24-1½) | 600 (24) | 870 (34) | 410 (16) | 990 (39) | 995 (3′-3¼″) | 3.47 m (11′-4″) | 2.08 m (6′-8½″) | 960 (37½) | 762 (30) | 1.7 m (5′-6½″) | 1.77 m (5′-9½″) | 100 (3¾) | 40 (1¼) | 50° | 2.4 (3.1) | 1.02 m (3′-8″) | 1.07 m (3′-6″) | 2.1 m (6′-10″) | 4.18 m (14′-0″) | 48 | 76 (110) |
| | DS 750-1½ (DS 30-1½) | 750 (30) | 990 (39) | 480 (19) | 1140 (3′-9″) | 1.193 m (3′-11″) | 3.98 m (13′-0¾″) | 2.35 m (7′-8¼″) | 1.1 m (3′-7″) | 914 (36) | 1.95 m (6′-5″) | 2.03 m (6′-7¾″) | 100 (3¾) | 40 (1¼) | 50° | 3.1 (4.0) | 1.15 m (4′-2″) | 1.26 m (4′-2″) | 2.38 m (7′-11″) | 4.79 m (16′-3″) | 54 | 86 (130) |
| | DS 900-1½ (DS 36-1½) | 900 (36) | 1140 (3′-9″) | 560 (22) | 1320 (4′-4″) | 1.461 m (4′-9½″) | 4.64 m (15′-3″) | 2.7 m (8′-10½″) | 1.26 m (4′-1¾″) | 1.119 m (3′-8″) | 2.28 m (7′-6″) | 2.35 m (7′-9″) | 100 (3¾) | 40 (1¼) | 50° | 4.1 (5.3) | 1.32 m (4′-10″) | 1.53 m (5′-0″) | 2.74 m (9′-2″) | 5.59 m (19′-0″) | 62 | 99 (150) |
| 45° | DS 375-1½ (DS 15-1½) | 375 (15) | 720 (28) | 260 (10) | 740 (29) | 683 (27) | 2.92 m (9′-6″) | 1.88 m (6′-1¼″) | 780 (30¼) | 483 (19) | 1.42 m (4′-7½″) | 1.5 m (4′-10½″) | 100 (4) | 30 (1¼) | 45° | 1.6 (2.1) | 828 (36) | 753 (29) | 1.89 m (6′-1″) | 3.47 m (11′-6″) | 40 | 64 (100) |
| | DS 450-1½ (DS 18-1½) | 450 (18) | 720 (28) | 330 (13) | 810 (32) | 791 (31) | 3.03 m (9′-10¼″) | 1.88 m (6′-1¼″) | 780 (30¼) | 559 (22) | 1.47 m (4′-9½″) | 1.56 m (5′-0¾″) | 100 (4) | 30 (1¼) | 45° | 1.8 (2.4) | 847 (36) | 859 (34) | 1.94 m (6′-2″) | 3.64 m (12′-0″) | 44 | 70 (100) |
| | DS 600-1½ (DS 24-1½) | 600 (24) | 870 (34) | 410 (16) | 990 (39) | 1.078 m (3′-6½″) | 3.74 m (12′-2½″) | 2.28 m (7′-4¾″) | 950 (36¾) | 762 (30) | 1.83 m (5′-11½″) | 1.91 m (6′-3″) | 100 (4) | 30 (1¼) | 45° | 2.6 (3.4) | 1.0 m (3′-8″) | 1.15 m (3′-9″) | 2.31 m (7′-7″) | 4.47 m (15′-0″) | 50 | 80 (120) |
| | DS 750-1½ (DS 30-1½) | 750 (30) | 990 (39) | 480 (19) | 1140 (3′-9″) | 1.293 m (4′-3″) | 4.29 m (14′-1″) | 2.59 m (8′-6″) | 1.08 m (3′-6¼″) | 914 (36) | 2.1 m (6′-11″) | 2.19 m (7′-2″) | 100 (4) | 30 (1¼) | 45° | 3.4 (4.4) | 1.13 m (4′-2″) | 1.36 m (4′-5″) | 2.63 m (8′-8″) | 5.12 m (17′-3″) | 62 | 98 (150) |
| | DS 900-1½ (DS 36-1½) | 900 (36) | 1140 (3′-9″) | 560 (22) | 1320 (4′-4″) | 1.583 m (5′-2¼″) | 5.01 m (16′-5¼″) | 2.98 m (9′-9½″) | 1.24 m (4′-0¾″) | 1.119 m (3′-8″) | 2.46 m (8′-1″) | 2.55 m (8′-4¼″) | 100 (4) | 30 (1¼) | 45° | 4.4 (5.7) | 1.3 m (4′-10″) | 1.65 m (5′-5″) | 3.02 m (10′-0″) | 5.97 m (20′-3″) | 66 | 105 (160) |
| 50° | DS 375-1½ (DS 15-1½) | 375 (15) | 720 (28) | 260 (10) | 740 (29) | 751 (29½) | 3.18 m (10′-4½″) | 2.11 m (6′-10″) | 770 (29¾) | 483 (19) | 1.55 m (5′-0½″) | 1.64 m (5′-4″) | 110 (4¼) | 30 (1) | 40° | 1.8 (2.3) | 817 (35) | 822 (32) | 2.11 m (6′-11″) | 3.75 m (12′-6″) | 46 | 73 (110) |
| | DS 450-1½ (DS 18-1½) | 450 (18) | 720 (28) | 330 (13) | 810 (32) | 870 (34¼) | 3.31 m (10′-9″) | 2.11 m (6′-10″) | 770 (29¾) | 559 (22) | 1.61 m (5′-2¾″) | 1.7 m (5′-6¼″) | 110 (4¼) | 30 (1) | 40° | 2.0 (2.6) | 836 (36) | 939 (37) | 2.16 m (6′-11″) | 3.94 m (13′-0″) | 46 | 73 (110) |
| | DS 600-1½ (DS 24-1½) | 600 (24) | 870 (34) | 410 (16) | 990 (39) | 1.185 m (3′-10¾″) | 4.08 m (13′-4¼″) | 2.55 m (8′-3½″) | 930 (36¼) | 762 (30) | 2 m (6′-6¼″) | 2.09 m (6′-10″) | 110 (4¼) | 30 (1) | 40° | 2.8 (3.7) | 990 (3′-7″) | 1.26 m (4′-1″) | 2.58 m (8′-4″) | 4.83 m (16′-0″) | 56 | 89 (130) |
| | DS 750-1½ (DS 30-1½) | 750 (30) | 990 (39) | 480 (19) | 1140 (3′-9″) | 1.422 m (4′-8″) | 4.7 m (15′-5″) | 2.9 m (9′-6″) | 1.06 m (3′-5½″) | 914 (36) | 2.3 m (7′-6¾″) | 2.39 m (7′-10¼″) | 110 (4¼) | 30 (1) | 40° | 3.7 (4.8) | 1.12 m (4′-1″) | 1.49 m (4′-10″) | 2.94 m (9′-7″) | 5.54 m (18′-6″) | 66 | 105 (160) |
| | DS 900-1½ (DS 36-1½) | 900 (36) | 1140 (3′-9″) | 560 (22) | 1320 (4′-4″) | 1.741 m (5′-8½″) | 5.48 m (18′-0¼″) | 3.34 m (10′-11½″) | 1.22 m (4′-0″) | 1.119 m (3′-8″) | 2.7 m (8′-10¼″) | 2.78 m (9′-2″) | 110 (4¼) | 30 (1) | 40° | 4.8 (6.3) | 1.28 m (4′-9″) | 1.81 m (5′-11″) | 3.38 m (11′-1″) | 6.47 m (21′-9″) | 74 | 118 (180) |
| 55° | DS 375-1½ (DS 15-1½) | 375 (15) | 720 (28) | 260 (10) | 740 (29) | 842 (33) | 3.54 m (11′-6¼″) | 2.4 m (7′-9″) | 760 (29¼) | 483 (19) | 1.72 m (5′-7¼″) | 1.82 m (5′-11″) | 110 (4½) | 30 (1) | 35° | 2.0 (2.6) | 809 (35) | 914 (36) | 2.4 m (7′-10″) | 4.12 m (13′-9″) | 50 | 79 (120) |
| | DS 450-1½ (DS 18-1½) | 450 (18) | 720 (28) | 330 (13) | 810 (32) | 975 (38¼) | 3.68 m (11′-11½″) | 2.4 m (7′-9″) | 760 (29¼) | 559 (22) | 1.79 m (5′-9¾″) | 1.89 m (6′-1¾″) | 110 (4½) | 30 (1) | 35° | 2.2 (2.9) | 827 (36) | 1.05 m (3′-5″) | 2.46 m (7′-10″) | 4.33 m (14′-3″) | 50 | 80 (120) |
| | DS 600-1½ (DS 24-1½) | 600 (24) | 870 (34) | 410 (16) | 990 (39) | 1.329 m (4′-4¼″) | 4.55 m (14′-10½″) | 2.9 m (9′-5″) | 910 (35¾) | 762 (30) | 2.23 m (7′-3¼″) | 2.32 m (7′-7¼″) | 110 (4½) | 30 (1) | 35° | 3.2 (4.2) | 978 (3′-6″) | 1.4 m (4′-7″) | 2.94 m (9′-5″) | 5.32 m (17′-6″) | 62 | 99 (150) |
| | DS 750-1½ (DS 30-1½) | 750 (30) | 990 (39) | 480 (19) | 1140 (3′-9″) | 1.594 m (5′-2¾″) | 5.24 m (17′-2¼″) | 3.3 m (10′-9¾″) | 1.04 m (3′-5″) | 914 (36) | 2.57 m (8′-5¼″) | 2.67 m (8′-9″) | 110 (4½) | 30 (1) | 35° | 4.1 (5.4) | 1.1 m (4′-1″) | 1.66 m (5′-6″) | 3.33 m (10′-11″) | 6.1 m (20′-6″) | 74 | 117 (180) |
| | DS 900-1½ (DS 36-1½) | 900 (36) | 1140 (3′-9″) | 560 (22) | 1320 (4′-4″) | 1.951 m (6′-4¾″) | 6.12 m (20′-1¼″) | 3.79 m (12′-5¾″) | 1.2 m (3′-11¼″) | 1.119 m (3′-8″) | 3.01 m (9′-10¾″) | 3.11 m (10′-2½″) | 110 (4½) | 30 (1) | 35° | 5.4 (7.1) | 1.26 m (4′-9″) | 2.02 m (6′-7″) | 3.84 m (12′-8″) | 7.12 m (24′-0″) | 86 | 136 (200) |
| 60° | DS 375-1½ (DS 15-1½) | 375 (15) | 720 (28) | 260 (10) | 740 (29) | 966 (38) | 4.03 m (13′-1¼″) | 2.78 m (9′-0¼″) | 750 (29) | 483 (19) | 1.96 m (6′-4½″) | 2.07 m (6′-8¾″) | 120 (4½) | 20 (0¾) | 30° | 2.2 (2.9) | 802 (34) | 1.04 m (3′-5″) | 2.78 m (9′-0″) | 4.62 m (15′-3″) | 54 | 86 (130) |
| | DS 450-1½ (DS 18-1½) | 450 (18) | 720 (28) | 330 (13) | 810 (32) | 1.118 m (3′-8″) | 4.18 m (13′-7¼″) | 2.78 m (9′-0¼″) | 750 (29) | 559 (22) | 2.04 m (6′-7½″) | 2.14 m (6′-11¾″) | 120 (4½) | 20 (0¾) | 30° | 2.5 (3.2) | 820 (34) | 1.19 m (3′-11″) | 2.85 m (9′-0″) | 4.86 m (15′-9″) | 58 | 92 (140) |
| | DS 600-1½ (DS 24-1½) | 600 (24) | 870 (34) | 410 (16) | 990 (39) | 1.524 m (5′-0″) | 5.19 m (16′-11¼″) | 3.36 m (10′-11¼″) | 900 (35¼) | 762 (30) | 2.04 m (8′-3½″) | 2.65 m (8′-7¾″) | 120 (4½) | 20 (0¾) | 30° | 3.6 (4.7) | 969 (3′-6″) | 1.6 m (5′-3″) | 3.41 m (11′-0″) | 5.98 m (19′-9″) | 72 | 114 (170) |
| | DS 750-1½ (DS 30-1½) | 750 (30) | 990 (39) | 480 (19) | 1140 (3′-9″) | 1.828 m (6′-0″) | 5.97 m (19′-7¼″) | 3.83 m (12′-6¾″) | 1.03 m (3′-4½″) | 914 (36) | 2.93 m (9′-7½″) | 3.04 m (9′-11¾″) | 120 (4½) | 20 (0¾) | 30° | 4.7 (6.1) | 1.09 m (4′-1″) | 1.9 m (6′-3″) | 3.87 m (12′-8″) | 6.86 m (23′-0″) | 82 | 130 (200) |
| | DS 900-1½ (DS 36-1½) | 900 (36) | 1140 (3′-9″) | 560 (22) | 1320 (4′-4″) | 2.238 m (7′-4″) | 6.98 m (22′-11¼″) | 4.41 m (14′-5¾″) | 1.18 m (3′-10½″) | 1.119 m (3′-8″) | 3.44 m (11′-3½″) | 3.54 m (11′-7¾″) | 119 (4½) | 20 (0¾) | 30° | 6.2 (8.1) | 1.25 m (4′-7″) | 2.31 m (7′-7″) | 4.46 m (14′-7″) | 8.02 m (26′-9″) | 98 | 155 (230) |

All dimensions are in millimeters (inches) unless otherwise shown.

All slope ratios are expressed as units of vertical displacement to units of horizontal displacement (V:H).

Illinois Department of Transportation

APPROVED January 1, 1997
Ralph E. Anderson
ENGINEER OF BRIDGES AND STRUCTURES

APPROVED January 1, 1997
Gary Hankel
ENGINEER OF DESIGN AND ENVIRONMENT

ISSUED 1-1-97

REINFORCED CONCRETE END SECTIONS FOR PIPE CULVERTS
375 mm (15″) THRU 900 mm (36″) DIA.
SKEWED WITH ROADWAY
(Sheet 3 of 5)

**STANDARD 542201**

# WINGS FOR 1:2 SLOPE

| Skew Angle | Design No. | Nominal Dia. For Pipe | DIMENSIONS FOR CONCRETE A | B | C | D | E | F | G | H | J | K | M | N | α | Concrete 2 End Secs. m3 (yd3) | Reinf. Bars - 2 End Secs. h - bars o | p | q | Lgth. | v-bars No. | Bars 2 End Secs. kg (lbs) |
|---|---|---|---|---|---|---|---|---|---|---|---|---|---|---|---|---|---|---|---|---|---|---|
| 5° | DS 375-2 (DS 15-2) | 375 (15) | 960 (38) | 260 (10) | 740 (29) | 485 (19) | 2.63 m (8′-7¾″) | 1.42 m (4′-8¼″) | 1.31 m (4′-3½″) | 483 (19) | 1.31 m (4′-3¾″) | 1.32 m (4′-4″) | 70 (2¾) | 60 (2¼) | 85° | 1.5 (1.9) | 1.33 m (4′-7″) | 551 (21) | 1.45 m (4′-11″) | 3.33 m (11′-3″) | 34 | 55 (80) |
| | DS 450-2 (DS 18-2) | 450 (18) | 960 (38) | 330 (13) | 810 (32) | 561 (22) | 2.7 m (8′-10¾″) | 1.42 m (4′-8¼″) | 1.31 m (4′-3½″) | 559 (22) | 1.35 m (4′-5¼″) | 1.35 m (4′-5½″) | 70 (2¾) | 60 (2¼) | 85° | 1.5 (2.0) | 1.36 m (4′-7″) | 626 (24) | 1.48 m (4′-11″) | 3.47 m (11′-6″) | 34 | 55 (80) |
| | DS 600-2 (DS 24-2) | 600 (24) | 1.16 m (3′-10″) | 410 (16) | 990 (39) | 765 (30) | 3.31 m (10′-11″) | 1.72 m (5′-8″) | 1.58 m (5′-2½″) | 762 (30) | 1.65 m (5′-5¼″) | 1.66 m (5′-5¾″) | 70 (2¾) | 60 (2¼) | 85° | 2.2 (2.9) | 1.62 m (5′-5″) | 832 (32) | 1.77 m (5′-11″) | 4.22 m (14′-0″) | 42 | 68 (100) |
| | DS 750-2 (DS 30-2) | 750 (30) | 1.32 m (4′-4″) | 480 (19) | 1.14 m (3′-9″) | 917 (36) | 3.78 m (12′-5″) | 1.96 m (6′-5″) | 1.79 m (5′-10½″) | 914 (36) | 1.89 m (6′-2¼″) | 1.89 m (6′-2¾″) | 70 (2¾) | 60 (2¼) | 85° | 2.8 (3.7) | 1.84 m (6′-3″) | 983 (39) | 2.0 m (6′-9″) | 4.83 m (16′-3″) | 48 | 77 (120) |
| | DS 900-2 (DS 36-2) | 900 (36) | 1.52 m (5′-0″) | 560 (22) | 1.32 m (4′-4″) | 1.123 m (3′-8¼″) | 4.39 m (14′-5″) | 2.25 m (7′-4¾″) | 2.07 m (6′-9¼″) | 1.119 m (3′-8″) | 2.19 m (7′-2¼″) | 2.2 m (7′-2¾″) | 70 (2¾) | 60 (2¼) | 85° | 3.4 (4.5) | 2.12 m (7′-2″) | 1.19 m (3′-11″) | 2.3 m (7′-8″) | 5.6 m (18′-9″) | 54 | 87 (130) |
| 10° | DS 375-2 (DS 15-2) | 375 (15) | 960 (38) | 260 (10) | 740 (29) | 490 (19¼) | 2.65 m (8′-9″) | 1.5 m (4′-11″) | 1.26 m (4′-1½″) | 483 (19) | 1.32 m (4′-4″) | 1.33 m (4′-5″) | 70 (2¾) | 60 (2¼) | 80° | 1.5 (2.0) | 1.28 m (4′-4″) | 557 (22) | 1.52 m (5′-1″) | 3.36 m (11′-3″) | 34 | 55 (80) |
| | DS 450-2 (DS 18-2) | 450 (18) | 960 (38) | 330 (13) | 810 (32) | 568 (22¼) | 2.73 m (9′-0″) | 1.5 m (4′-11″) | 1.26 m (4′-1½″) | 559 (22) | 1.36 m (4′-5¾″) | 1.37 m (4′-6¼″) | 70 (2¾) | 60 (2¼) | 80° | 1.6 (2.1) | 1.32 m (4′-4″) | 633 (25) | 1.55 m (5′-1″) | 3.5 m (11′-6″) | 34 | 55 (80) |
| | DS 600-2 (DS 24-2) | 600 (24) | 1.16 m (3′-10″) | 410 (16) | 990 (39) | 774 (30½) | 3.34 m (11′-0¼″) | 1.81 m (5′-11½″) | 1.52 m (5′-0″) | 762 (30) | 1.66 m (5′-5¾″) | 1.68 m (5′-6½″) | 70 (2¾) | 60 (2¼) | 80° | 2.3 (3.0) | 1.57 m (5′-4″) | 841 (33) | 1.85 m (6′-2″) | 4.26 m (14′-3″) | 42 | 68 (100) |
| | DS 750-2 (DS 30-2) | 750 (30) | 1.32 m (4′-4″) | 480 (19) | 1.14 m (3′-9″) | 928 (36½) | 3.82 m (12′-6¾″) | 2.06 m (6′-9″) | 1.73 m (5′-8″) | 914 (36) | 1.9 m (6′-3″) | 1.92 m (6′-3¾″) | 70 (2¾) | 60 (2¼) | 80° | 2.9 (3.8) | 1.78 m (6′-0″) | 993 (39) | 2.1 m (7′-0″) | 4.87 m (16′-3″) | 48 | 77 (120) |
| | DS 900-2 (DS 36-2) | 900 (36) | 1.52 m (5′-0″) | 560 (22) | 1.32 m (4′-4″) | 1.136 m (3′-8¾″) | 4.44 m (14′-7″) | 2.37 m (7′-9¼″) | 1.99 m (6′-6¼″) | 1.119 m (3′-8″) | 2.21 m (7′-3″) | 2.23 m (7′-4″) | 70 (2¾) | 60 (2¼) | 80° | 3.6 (4.7) | 2.04 m (7′-0″) | 1.2 m (3′-11″) | 2.42 m (8′-1″) | 5.66 m (19′-0″) | 54 | 87 (130) |
| 15° | DS 375-2 (DS 15-2) | 375 (15) | 960 (38) | 260 (10) | 740 (29) | 500 (19¾) | 2.7 m (8′-10¾″) | 1.58 m (5′-2½″) | 1.21 m (4′-0″) | 483 (19) | 1.34 m (4′-4¾″) | 1.36 m (4′-6″) | 80 (3) | 50 (2) | 75° | 1.5 (2.0) | 1.24 m (4′-3″) | 567 (22) | 1.6 m (5′-5″) | 3.41 m (11′-6″) | 34 | 55 (80) |
| | DS 450-2 (DS 18-2) | 450 (18) | 960 (38) | 330 (13) | 810 (32) | 579 (22¾) | 2.78 m (9′-2″) | 1.58 m (5′-2½″) | 1.21 m (4′-0″) | 559 (22) | 1.38 m (4′-6½″) | 1.4 m (4′-7½″) | 80 (3) | 50 (2) | 75° | 1.7 (2.2) | 1.27 m (4′-3″) | 644 (25) | 1.64 m (5′-5″) | 3.55 m (11′-9″) | 34 | 55 (80) |
| | DS 600-2 (DS 24-2) | 600 (24) | 1.16 m (3′-10″) | 410 (16) | 990 (39) | 789 (31) | 3.4 m (11′-2¾″) | 1.91 m (6′-3½″) | 1.47 m (4′-10″) | 762 (30) | 1.69 m (5′-6¾″) | 1.72 m (5′-8″) | 80 (3) | 50 (2) | 75° | 2.4 (3.1) | 1.52 m (5′-2″) | 857 (34) | 1.95 m (6′-6″) | 4.32 m (14′-6″) | 42 | 68 (100) |
| | DS 750-2 (DS 30-2) | 750 (30) | 1.32 m (4′-4″) | 480 (19) | 1.14 m (3′-9″) | 946 (37¼) | 3.89 m (12′-9¼″) | 2.17 m (7′-1½″) | 1.67 m (5′-5½″) | 914 (36) | 1.93 m (6′-4″) | 1.96 m (6′-5¼″) | 80 (3) | 50 (2) | 75° | 3.0 (3.9) | 1.72 m (5′-10″) | 1.01 m (3′-4″) | 2.21 m (7′-4″) | 4.94 m (16′-6″) | 52 | 83 (130) |
| | DS 900-2 (DS 36-2) | 900 (36) | 1.52 m (5′-0″) | 560 (22) | 1.32 m (4′-4″) | 1.158 m (3′-9½″) | 4.52 m (14′-10¼″) | 2.5 m (8′-2½″) | 1.92 m (6′-3½″) | 1.119 m (3′-8″) | 2.25 m (7′-4½″) | 2.27 m (7′-5¾″) | 80 (3) | 50 (2) | 75° | 3.8 (5.0) | 1.97 m (6′-9″) | 1.22 m (4′-0″) | 2.55 m (8′-6″) | 5.74 m (19′-3″) | 56 | 90 (140) |
| 20° | DS 375-2 (DS 15-2) | 375 (15) | 960 (38) | 260 (10) | 740 (29) | 514 (20¼) | 2.77 m (9′-1½″) | 1.68 m (5′-6¼″) | 1.18 m (3′-10½″) | 483 (19) | 1.37 m (4′-6″) | 1.4 m (4′-7½″) | 80 (3) | 50 (2) | 70° | 1.6 (2.1) | 1.21 m (4′-2″) | 581 (23) | 1.69 m (5′-8″) | 3.48 m (11′-9″) | 36 | 58 (90) |
| | DS 450-2 (DS 18-2) | 450 (18) | 960 (38) | 330 (13) | 810 (32) | 595 (23½) | 2.85 m (9′-4½″) | 1.68 m (5′-6¼″) | 1.18 m (3′-10½″) | 559 (22) | 1.41 m (4′-7½″) | 1.44 m (4′-9″) | 80 (3) | 50 (2) | 70° | 1.8 (2.3) | 1.24 m (4′-2″) | 661 (26) | 1.73 m (5′-8″) | 3.63 m (12′-0″) | 36 | 58 (90) |
| | DS 600-2 (DS 24-2) | 600 (24) | 1.16 m (3′-10″) | 410 (16) | 990 (39) | 811 (32) | 3.49 m (11′-6¼″) | 2.03 m (6′-8¼″) | 1.42 m (4′-8¼″) | 762 (30) | 1.73 m (5′-8½″) | 1.76 m (5′-9¾″) | 80 (3) | 50 (2) | 70° | 2.4 (3.2) | 1.47 m (5′-0″) | 879 (35) | 2.07 m (6′-10″) | 4.42 m (14′-9″) | 48 | 77 (120) |
| | DS 750-2 (DS 30-2) | 750 (30) | 1.32 m (4′-4″) | 480 (19) | 1.14 m (3′-9″) | 973 (38¼) | 3.99 m (13′-1¼″) | 2.3 m (7′-6¾″) | 1.61 m (5′-3½″) | 914 (36) | 1.98 m (6′-6″) | 2.01 m (6′-7¼″) | 80 (3) | 50 (2) | 70° | 3.1 (4.1) | 1.67 m (5′-9″) | 1.04 m (3′-5″) | 2.35 m (7′-10″) | 5.05 m (17′-0″) | 52 | 84 (130) |
| | DS 900-2 (DS 36-2) | 900 (36) | 1.52 m (5′-0″) | 560 (22) | 1.32 m (4′-4″) | 1.191 m (3′-10¾″) | 4.64 m (15′-3″) | 2.65 m (8′-8½″) | 1.86 m (6′-1¼″) | 1.119 m (3′-8″) | 2.3 m (7′-6¾″) | 2.34 m (7′-8¼″) | 80 (3) | 50 (2) | 70° | 4.1 (5.3) | 1.91 m (6′-6″) | 1.26 m (4′-1″) | 2.7 m (8′-11″) | 5.87 m (19′-6″) | 58 | 94 (140) |
| 25° | DS 375-2 (DS 15-2) | 375 (15) | 960 (38) | 260 (10) | 740 (29) | 533 (21) | 2.86 m (9′-5″) | 1.79 m (5′-10¾″) | 1.14 m (3′-9″) | 483 (19) | 1.41 m (4′-7½″) | 1.45 m (4′-9½″) | 90 (3¼) | 50 (1¾) | 65° | 1.7 (2.2) | 1.12 m (4′-1″) | 600 (23) | 1.8 m (6′-0″) | 3.58 m (12′-0″) | 38 | 61 (90) |
| | DS 450-2 (DS 18-2) | 450 (18) | 960 (38) | 330 (13) | 810 (32) | 617 (24¼) | 2.95 m (9′-8½″) | 1.79 m (5′-10¾″) | 1.14 m (3′-9″) | 559 (22) | 1.45 m (4′-9¼″) | 1.5 m (4′-11¼″) | 90 (3¼) | 50 (1¾) | 65° | 1.8 (2.4) | 1.2 m (4′-0″) | 683 (27) | 1.85 m (6′-0″) | 3.73 m (12′-3″) | 42 | 67 (100) |
| | DS 600-2 (DS 24-2) | 600 (24) | 1.16 m (3′-10″) | 410 (16) | 990 (39) | 841 (33) | 3.61 m (11′-11″) | 2.16 m (7′-1½″) | 1.38 m (4′-6½″) | 762 (30) | 1.78 m (5′-10½″) | 1.83 m (6′-0½″) | 90 (3¼) | 50 (1¾) | 65° | 2.6 (3.4) | 1.43 m (4′-11″) | 909 (36) | 2.2 m (7′-4″) | 4.55 m (15′-3″) | 48 | 77 (120) |
| | DS 750-2 (DS 30-2) | 750 (30) | 1.32 m (4′-4″) | 480 (19) | 1.14 m (3′-9″) | 1.008 m (3′-3¾″) | 4.13 m (13′-6¾″) | 2.46 m (8′-0¾″) | 1.57 m (5′-1¾″) | 914 (36) | 2.04 m (6′-8½″) | 2.09 m (6′-10¼″) | 90 (3¼) | 50 (1¾) | 65° | 3.3 (4.3) | 1.62 m (5′-6″) | 1.08 m (3′-6″) | 2.5 m (8′-3″) | 5.2 m (17′-3″) | 52 | 84 (130) |
| | DS 900-2 (DS 36-2) | 900 (36) | 1.52 m (5′-0″) | 560 (22) | 1.32 m (4′-4″) | 1.235 m (4′-0½″) | 4.8 m (15′-9¼″) | 2.83 m (9′-3¾″) | 1.81 m (5′-11¼″) | 1.119 m (3′-8″) | 2.38 m (7′-9¾″) | 2.42 m (7′-11½″) | 90 (3¼) | 50 (1¾) | 65° | 4.3 (5.6) | 1.86 m (6′-5″) | 1.3 m (4′-3″) | 2.88 m (9′-7″) | 6.04 m (20′-3″) | 60 | 97 (150) |
| 30° | DS 375-2 (DS 15-2) | 375 (15) | 960 (38) | 260 (10) | 740 (29) | 558 (22) | 2.98 m (9′-9¾″) | 1.92 m (6′-4″) | 1.11 m (3′-8″) | 483 (19) | 1.46 m (4′-9¾″) | 1.52 m (5′-0″) | 90 (3½) | 40 (1½) | 60° | 1.8 (2.3) | 1.15 m (4′-0″) | 626 (24) | 1.93 m (6′-6″) | 3.71 m (12′-6″) | 42 | 67 (100) |
| | DS 450-2 (DS 18-2) | 450 (18) | 960 (38) | 330 (13) | 810 (32) | 645 (25½) | 3.07 m (10′-1½″) | 1.92 m (6′-4″) | 1.11 m (3′-8″) | 559 (22) | 1.51 m (4′-11½″) | 1.56 m (5′-2″) | 90 (3½) | 40 (1½) | 60° | 1.9 (2.5) | 1.18 m (4′-0″) | 712 (28) | 1.98 m (6′-5″) | 3.87 m (12′-9″) | 42 | 67 (100) |
| | DS 600-2 (DS 24-2) | 600 (24) | 1.16 m (3′-10″) | 410 (16) | 990 (39) | 880 (34¾) | 3.77 m (12′-5″) | 2.32 m (7′-8″) | 1.34 m (4′-5″) | 762 (30) | 1.86 m (6′-1½″) | 1.91 m (6′-3½″) | 90 (3½) | 40 (1½) | 60° | 2.8 (3.6) | 1.4 m (4′-10″) | 949 (37) | 2.37 m (7′-10″) | 4.71 m (15′-9″) | 52 | 83 (130) |
| | DS 750-2 (DS 30-2) | 750 (30) | 1.32 m (4′-4″) | 480 (19) | 1.14 m (3′-9″) | 1.055 m (3′-5½″) | 4.31 m (14′-1¾″) | 2.64 m (8′-8″) | 1.53 m (5′-0″) | 914 (36) | 2.13 m (6′-11¾″) | 2.18 m (7′-2″) | 90 (3½) | 40 (1½) | 60° | 3.4 (4.5) | 1.58 m (5′-6″) | 1.12 m (3′-8″) | 2.69 m (8′-10″) | 5.39 m (18′-0″) | 56 | 90 (140) |
| | DS 900-2 (DS 36-2) | 900 (36) | 1.52 m (5′-0″) | 560 (22) | 1.32 m (4′-4″) | 1.292 m (4′-2¾″) | 5.01 m (16′-5½″) | 3.04 m (10′-0″) | 1.76 m (5′-9¼″) | 1.119 m (3′-8″) | 2.48 m (8′-1¾″) | 2.53 m (8′-3¾″) | 90 (3½) | 40 (1½) | 60° | 4.5 (5.9) | 1.82 m (6′-4″) | 1.36 m (4′-5″) | 3.09 m (10′-3″) | 6.26 m (21′-0″) | 66 | 106 (160) |

All dimensions are in millimeters (inches) unless otherwise shown.

All slope ratios are expressed as units of vertical displacement to units of horizontal displacement (V:H).

Illinois Department of Transportation

APPROVED January 1, 1997
Ralph E. Anderson
ENGINEER OF BRIDGES AND STRUCTURES

APPROVED January 1, 1997
Gary Hankel
ENGINEER OF DESIGN AND ENVIRONMENT

ISSUED 1-1-97

REINFORCED CONCRETE END SECTIONS
FOR PIPE CULVERTS
375 mm (15″) THRU 900 mm (36″) DIA.
SKEWED WITH ROADWAY
(Sheet 4 of 5)

**STANDARD 542201**

# WINGS FOR 1:2 SLOPE

| Skew Angle | Design No. | Nominal Dia. For Pipe | DIMENSIONS FOR CONCRETE A | B | C | D | E | F | G | H | J | K | M | N | α | Concrete 2 End Secs. m3 (yd3) | Reinf. Bars - 2 End Secs. h - bars o | p | q | Lgth. | v-bars No. | Bars 2 End Secs. kg (lbs) |
|---|---|---|---|---|---|---|---|---|---|---|---|---|---|---|---|---|---|---|---|---|---|---|
| 35° | DS 375-2 (DS 15-2) | 375 (15) | 960 (38) | 260 (10) | 740 (29) | 590 (23 1/4) | 3.14 m (10′-4″) | 2.08 m (6′-10 1/4″) | 1.08 m (3′-6 3/4″) | 485 (19) | 1.54 m (5′-0 3/4″) | 1.6 m (5′-3 1/4″) | 90 (3 3/4) | 40 (1 1/2) | 55° | 1.8 (2.4) | 1.13 m (3′-11″) | 658 (26) | 2.09 m (6′-11″) | 3.87 m (13′-0″) | 44 | 70 (110) |
| | DS 450-2 (DS 18-2) | 450 (18) | 960 (38) | 330 (13) | 810 (32) | 683 (27) | 3.23 m (10′-7 3/4″) | 2.08 m (6′-10 1/4″) | 1.09 m (3′-6 3/4″) | 559 (22) | 1.58 m (5′-2 1/2″) | 1.65 m (5′-5 1/4″) | 90 (3 3/4) | 40 (1 1/2) | 55° | 2.0 (2.6) | 1.15 m (3′-11″) | 750 (29) | 2.14 m (6′-11″) | 4.04 m (13′-3″) | 44 | 70 (110) |
| | DS 600-2 (DS 24-2) | 600 (24) | 1.16 m (3′-10″) | 410 (16) | 990 (39) | 930 (36 1/2) | 3.97 m (13′-1″) | 2.52 m (8′-3 1/2″) | 1.31 m (4′-3 3/4″) | 762 (30) | 1.95 m (6′-5 1/4″) | 2.02 m (6′-7 3/4″) | 90 (3 3/4) | 40 (1 1/2) | 55° | 2.9 (3.8) | 1.37 m (4′-8″) | 1.0 m (39) | 2.56 m (8′-4″) | 4.93 m (16′-3″) | 52 | 83 (130) |
| | DS 750-2 (DS 30-2) | 750 (30) | 1.32 m (4′-4″) | 480 (19) | 1.14 m (3′-9″) | 1.116 m (3′-8″) | 4.54 m (14′-11″) | 2.86 m (9′-4 1/2″) | 1.49 m (4′-10 1/2″) | 914 (36) | 2.24 m (7′-4 1/4″) | 2.3 m (7′-6 3/4″) | 90 (3 3/4) | 40 (1 1/2) | 55° | 3.7 (4.8) | 1.55 m (5′-4″) | 1.18 m (3′-11″) | 2.9 m (9′-6″) | 5.64 m (18′-9″) | 60 | 96 (150) |
| | DS 900-2 (DS 36-2) | 900 (36) | 1.52 m (5′-0″) | 560 (22) | 1.32 m (4′-4″) | 1.366 m (4′-5 3/4″) | 5.28 m (17′-4 1/4″) | 3.29 m (10′-10″) | 1.72 m (5′-7 3/4″) | 1.119 m (3′-8″) | 2.61 m (8′-6 3/4″) | 2.67 m (8′-9 1/2″) | 90 (3 3/4) | 40 (1 1/2) | 55° | 4.8 (6.3) | 1.78 m (6′-1″) | 1.43 m (4′-8″) | 3.34 m (11′-0″) | 6.55 m (21′-9″) | 70 | 112 (170) |
| 40° | DS 375-2 (DS 15-2) | 375 (15) | 960 (38) | 260 (10) | 740 (29) | 631 (24 3/4) | 3.34 m (11′-0″) | 2.27 m (7′-6″) | 1.06 m (3′-6″) | 483 (19) | 1.63 m (5′-4 1/2″) | 1.71 m (5′-7 1/2″) | 100 (3 3/4) | 40 (1 1/4) | 50° | 2.0 (2.6) | 1.1 m (3′-10″) | 700 (28) | 2.28 m (7′-7″) | 4.08 m (13′-9″) | 48 | 76 (120) |
| | DS 450-2 (DS 18-2) | 450 (18) | 960 (38) | 330 (13) | 810 (32) | 730 (28 3/4) | 3.44 m (11′-4″) | 2.27 m (7′-6″) | 1.08 m (3′-6″) | 559 (22) | 1.68 m (5′-6 1/2″) | 1.76 m (5′-9 1/2″) | 100 (3 3/4) | 40 (1 1/4) | 50° | 2.1 (2.8) | 1.13 m (3′-10″) | 798 (31) | 2.34 m (7′-7″) | 4.26 m (14′-0″) | 48 | 77 (120) |
| | DS 600-2 (DS 24-2) | 600 (24) | 1.16 m (3′-10″) | 410 (16) | 990 (39) | 995 (3′-3 1/4″) | 4.23 m (13′-11 1/4″) | 2.75 m (9′-0 3/4″) | 1.28 m (4′-2 3/4″) | 762 (30) | 2.08 m (6′-10 1/4″) | 2.15 m (7′-1″) | 100 (3 3/4) | 40 (1 1/4) | 50° | 3.1 (4.1) | 1.34 m (4′-7″) | 1.07 m (3′-6″) | 2.79 m (9′-2″) | 5.2 m (17′-3″) | 58 | 93 (140) |
| | DS 750-2 (DS 30-2) | 750 (30) | 1.32 m (4′-4″) | 480 (19) | 1.14 m (3′-9″) | 1.193 m (3′-11″) | 4.84 m (15′-10 3/4″) | 3.12 m (10′-3″) | 1.46 m (4′-9 1/2″) | 914 (36) | 2.38 m (7′-10″) | 2.46 m (8′-0 3/4″) | 100 (3 3/4) | 40 (1 1/4) | 50° | 4.0 (5.2) | 1.52 m (5′-3″) | 1.26 m (4′-2″) | 3.17 m (10′-4″) | 5.95 m (19′-9″) | 64 | 102 (150) |
| | DS 900-2 (DS 36-2) | 900 (36) | 1.52 m (5′-0″) | 560 (22) | 1.32 m (4′-4″) | 1.461 m (4′-9 1/2″) | 5.63 m (18′-6″) | 3.6 m (11′-10″) | 1.68 m (5′-6 1/4″) | 1.119 m (3′-8″) | 2.78 m (9′-1 1/2″) | 2.85 m (9′-4 1/2″) | 100 (3 3/4) | 40 (1 1/4) | 50° | 5.2 (6.8) | 1.74 m (6′-0″) | 1.53 m (5′-0″) | 3.65 m (12′-0″) | 6.92 m (23′-0″) | 78 | 124 (190) |
| 45° | DS 375-2 (DS 15-2) | 375 (15) | 960 (38) | 260 (10) | 740 (29) | 683 (27) | 3.6 m (11′-10 1/4″) | 2.51 m (8′-3 1/4″) | 1.04 m (3′-5 1/4″) | 483 (19) | 1.76 m (5′-9 1/2″) | 1.84 m (6′-0 3/4″) | 100 (4) | 30 (1 1/4) | 45° | 2.1 (2.8) | 1.09 m (3′-9″) | 753 (29) | 2.51 m (8′-4″) | 4.35 m (14′-6″) | 48 | 77 (120) |
| | DS 450-2 (DS 18-2) | 450 (18) | 960 (38) | 330 (13) | 810 (32) | 791 (31) | 3.7 m (12′-2 1/2″) | 2.51 m (8′-3 1/4″) | 1.04 m (3′-5 1/4″) | 559 (22) | 1.81 m (5′-11 1/2″) | 1.89 m (6′-3″) | 100 (4) | 30 (1 1/4) | 45° | 2.4 (3.1) | 1.11 m (3′-10″) | 859 (34) | 2.58 m (8′-4″) | 4.55 m (15′-0″) | 52 | 83 (120) |
| | DS 600-2 (DS 24-2) | 600 (24) | 1.16 m (3′-10″) | 410 (16) | 990 (39) | 1.078 m (3′-6 1/2″) | 4.56 m (15′-0 1/4″) | 3.03 m (10′-0 1/4″) | 1.26 m (4′-1 3/4″) | 762 (30) | 2.24 m (7′-4 1/2″) | 2.32 m (7′-7 3/4″) | 100 (4) | 30 (1 1/4) | 45° | 3.4 (4.4) | 1.32 m (4′-6″) | 1.15 m (3′-9″) | 3.08 m (10′-0″) | 5.55 m (18′-3″) | 60 | 96 (140) |
| | DS 750-2 (DS 30-2) | 750 (30) | 1.32 m (4′-4″) | 480 (19) | 1.14 m (3′-9″) | 1.293 m (4′-3″) | 5.23 m (17′-1 3/4″) | 3.45 m (11′-4″) | 1.43 m (4′-8 1/4″) | 914 (36) | 2.57 m (8′-5 1/4″) | 2.66 m (8′-8 1/2″) | 100 (4) | 30 (1 1/4) | 45° | 4.3 (5.6) | 1.49 m (5′-2″) | 1.36 m (4′-5″) | 3.5 m (11′-5″) | 6.35 m (21′-0″) | 72 | 115 (170) |
| | DS 900-2 (DS 36-2) | 900 (36) | 1.52 m (5′-0″) | 560 (22) | 1.32 m (4′-4″) | 1.583 m (5′-2 1/4″) | 6.08 m (19′-11 3/4″) | 3.97 m (13′-0 3/4″) | 1.65 m (5′-5″) | 1.119 m (3′-8″) | 3. m (9′-10 1/4″) | 3.08 m (10′-1 1/2″) | 100 (4) | 30 (1 1/4) | 45° | 5.7 (7.4) | 1.71 m (5′-11″) | 1.65 m (5′-5″) | 4.02 m (13′-2″) | 7.39 m (24′-6″) | 82 | 131 (200) |
| 50° | DS 375-2 (DS 15-2) | 375 (15) | 960 (38) | 260 (10) | 740 (29) | 751 (29 1/2) | 3.93 m (12′-11 1/2″) | 2.81 m (9′-3″) | 1.03 m (3′-4 1/2″) | 483 (19) | 1.92 m (6′-4″) | 2.01 m (6′-7 1/2″) | 110 (4 1/4) | 30 (1) | 40° | 2.4 (3.1) | 1.07 m (3′-9″) | 822 (32) | 2.81 m (9′-4″) | 4.7 m (15′-9″) | 54 | 86 (130) |
| | DS 450-2 (DS 18-2) | 450 (18) | 960 (38) | 330 (13) | 810 (32) | 870 (34 1/4) | 4.05 m (13′-4 1/4″) | 2.81 m (9′-3″) | 1.03 m (3′-4 1/2″) | 559 (22) | 1.98 m (6′-6 1/4″) | 2.07 m (6′-10″) | 110 (4 1/4) | 30 (1) | 40° | 2.6 (3.4) | 1.1 m (3′-8″) | 939 (37) | 2.88 m (9′-3″) | 4.92 m (16′-0″) | 54 | 86 (130) |
| | DS 600-2 (DS 24-2) | 600 (24) | 1.16 m (3′-10″) | 410 (16) | 990 (39) | 1.185 m (3′-10 3/4″) | 4.99 m (16′-5 1/2″) | 3.39 m (11′-2 1/2″) | 1.24 m (4′-1″) | 762 (30) | 2.45 m (8′-1″) | 2.54 m (8′-4 1/2″) | 110 (4 1/4) | 30 (1) | 40° | 3.7 (4.8) | 1.3 m (4′-6″) | 1.26 m (4′-1″) | 3.44 m (11′-2″) | 6.0 m (19′-9″) | 68 | 108 (160) |
| | DS 750-2 (DS 30-2) | 750 (30) | 1.32 m (4′-4″) | 480 (19) | 1.14 m (3′-9″) | 1.422 m (4′-8″) | 5.72 m (18′-9 1/2″) | 3.86 m (12′-8″) | 1.41 m (4′-7 1/4″) | 914 (36) | 2.82 m (9′-3″) | 2.91 m (9′-6 1/2″) | 110 (4 1/4) | 30 (1) | 40° | 4.7 (6.2) | 1.47 m (5′-1″) | 1.49 m (4′-11″) | 3.91 m (12′-9″) | 6.87 m (22′-9″) | 78 | 124 (190) |
| | DS 900-2 (DS 36-2) | 900 (36) | 1.52 m (5′-0″) | 560 (22) | 1.32 m (4′-4″) | 1.741 m (5′-8 1/2″) | 6.67 m (21′-10 3/4″) | 4.45 m (14′-7 1/2″) | 1.62 m (5′-3 3/4″) | 1.119 m (3′-8″) | 3.29 m (10′-9 1/2″) | 3.38 m (11′-1 1/4″) | 110 (4 1/4) | 30 (1) | 40° | 6.2 (8.1) | 1.69 m (5′-10″) | 1.81 m (5′-11″) | 4.5 m (14′-9″) | 8.0 m (26′-6″) | 90 | 143 (220) |
| 55° | DS 375-2 (DS 15-2) | 375 (15) | 960 (38) | 260 (10) | 740 (29) | 842 (33) | 4.38 m (14′-5″) | 3.2 m (10′-6 1/4″) | 1.01 m (3′-4″) | 483 (19) | 2.14 m (7′-0 1/2″) | 2.24 m (7′-4 1/2″) | 110 (4 1/2) | 30 (1) | 35° | 2.6 (3.4) | 1.06 m (3′-8″) | 914 (36) | 3.18 m (10′-7″) | 5.17 m (17′-3″) | 60 | 95 (140) |
| | DS 450-2 (DS 18-2) | 450 (18) | 960 (38) | 330 (13) | 810 (32) | 975 (38 1/4) | 4.38 m (14′-10 1/4″) | 3.2 m (10′-6 1/4″) | 1.01 m (3′-4″) | 559 (22) | 2.21 m (7′-3 1/4″) | 2.3 m (7′-7″) | 110 (4 1/2) | 30 (1) | 35° | 2.8 (3.7) | 1.08 m (3′-9″) | 1.05 m (3′-5″) | 3.27 m (10′-7″) | 5.4 m (17′-9″) | 60 | 96 (140) |
| | DS 600-2 (DS 24-2) | 600 (24) | 1.16 m (3′-10″) | 410 (16) | 990 (39) | 1.329 m (4′-4 1/4″) | 5.56 m (18′-4 1/4″) | 3.86 m (12′-9″) | 1.22 m (4′-0 1/4″) | 762 (30) | 2.73 m (9′-0 1/4″) | 2.83 m (9′-4″) | 110 (4 1/2) | 30 (1) | 35° | 4.1 (5.4) | 1.29 m (4′-5″) | 1.4 m (4′-7″) | 3.91 m (12′-9″) | 6.6 m (21′-9″) | 74 | 118 (180) |
| | DS 750-2 (DS 30-2) | 750 (30) | 1.32 m (4′-4″) | 480 (19) | 1.14 m (3′-9″) | 1.594 m (5′-2 3/4″) | 6.39 m (20′-11 1/2″) | 4.39 m (14′-5″) | 1.39 m (4′-6 1/2″) | 914 (36) | 3.15 m (10′-3 3/4″) | 3.24 m (10′-7 3/4″) | 110 (4 1/2) | 30 (1) | 35° | 5.3 (6.9) | 1.45 m (5′-1″) | 1.66 m (5′-5″) | 4.44 m (14′-6″) | 7.56 m (25′-0″) | 88 | 140 (210) |
| | DS 900-2 (DS 36-2) | 900 (36) | 1.52 m (5′-0″) | 560 (22) | 1.32 m (4′-4″) | 1.951 m (6′-4 3/4″) | 7.44 m (24′-5 1/2″) | 5.06 m (16′-7 1/2″) | 1.61 m (5′-3″) | 1.119 m (3′-8″) | 3.67 m (12′-0 3/4″) | 3.77 m (12′-4 3/4″) | 110 (4 1/2) | 30 (1) | 35° | 7.0 (9.1) | 1.67 m (5′-10″) | 2.02 m (6′-7″) | 5.11 m (16′-7″) | 8.8 m (29′-0″) | 102 | 162 (240) |
| 60° | DS 375-2 (DS 15-2) | 375 (15) | 960 (38) | 260 (10) | 740 (29) | 966 (38) | 4.99 m (16′-5 1/4″) | 3.71 m (12′-2 3/4″) | 1. m (3′-3 1/4″) | 483 (19) | 2.44 m (8′-0 1/2″) | 2.55 m (8′-4 3/4″) | 120 (4 1/2) | 20 (0 3/4) | 30° | 3.0 (3.9) | 1.05 m (3′-8″) | 1.04 m (3′-5″) | 3.7 m (12′-2″) | 5.79 m (19′-3″) | 64 | 102 (150) |
| | DS 450-2 (DS 18-2) | 450 (18) | 960 (38) | 330 (13) | 810 (32) | 1.118 m (3′-8″) | 5.15 m (16′-11 1/4″) | 3.71 m (12′-2 3/4″) | 1. m (3′-3 1/4″) | 559 (22) | 2.52 m (8′-3 1/2″) | 2.63 m (8′-7 3/4″) | 120 (4 1/2) | 20 (0 3/4) | 30° | 3.2 (4.2) | 1.07 m (3′-8″) | 1.19 m (3′-11″) | 3.8 m (12′-2″) | 6.06 m (19′-9″) | 70 | 111 (170) |
| | DS 600-2 (DS 24-2) | 600 (24) | 1.16 m (3′-10″) | 410 (16) | 990 (39) | 1.524 m (5′-0″) | 6.35 m (20′-11 1/4″) | 4.48 m (14′-9 3/4″) | 1.2 m (3′-11 3/4″) | 762 (30) | 3.12 m (10′-3 1/2″) | 3.23 m (10′-7 3/4″) | 120 (4 1/2) | 20 (0 3/4) | 30° | 4.7 (6.1) | 1.27 m (4′-5″) | 1.6 m (5′-3″) | 4.54 m (14′-10″) | 7.41 m (24′-6″) | 86 | 137 (200) |
| | DS 750-2 (DS 30-2) | 750 (30) | 1.32 m (4′-4″) | 480 (19) | 1.14 m (3′-9″) | 1.828 m (6′-0″) | 7.29 m (23′-11 1/4″) | 5.1 m (16′-9″) | 1.37 m (4′-5 3/4″) | 914 (36) | 3.59 m (11′-9 1/2″) | 3.7 m (12′-1 3/4″) | 120 (4 1/2) | 20 (0 3/4) | 30° | 6.0 (7.9) | 1.44 m (5′-0″) | 1.9 m (6′-3″) | 5.16 m (16′-9″) | 8.5 m (28′-0″) | 100 | 159 (240) |
| | DS 900-2 (DS 36-2) | 900 (36) | 1.52 m (5′-0″) | 560 (22) | 1.32 m (4′-4″) | 2.238 m (7′-4″) | 8.51 m (27′-11 1/4″) | 5.88 m (19′-3 3/4″) | 1.57 m (5′-2″) | 1.119 m (3′-8″) | 4.2 m (13′-9 1/2″) | 4.31 m (14′-1 3/4″) | 120 (4 1/2) | 20 (0 3/4) | 30° | 8.0 (10.4) | 1.65 m (5′-10″) | 2.31 m (7′-7″) | 5.94 m (19′-4″) | 9.89 m (32′-9″) | 114 | 181 (270) |

All dimensions are in millimeters (inches) unless otherwise shown.

All slope ratios are expressed as units of vertical displacement to units of horizontal displacement (V:H).

Illinois Department of Transportation

APPROVED January 1, 1997
Ralph E. Anderson
ENGINEER OF BRIDGES AND STRUCTURES

APPROVED January 1, 1997
Gary Hankel
ENGINEER OF DESIGN AND ENVIRONMENT

ISSUED 1-1-97

REINFORCED CONCRETE END SECTIONS
FOR PIPE CULVERTS
375 mm (15″) THRU 900 mm (36″) DIA.
SKEWED WITH ROADWAY
(Sheet 5 of 5)

**STANDARD 542201**