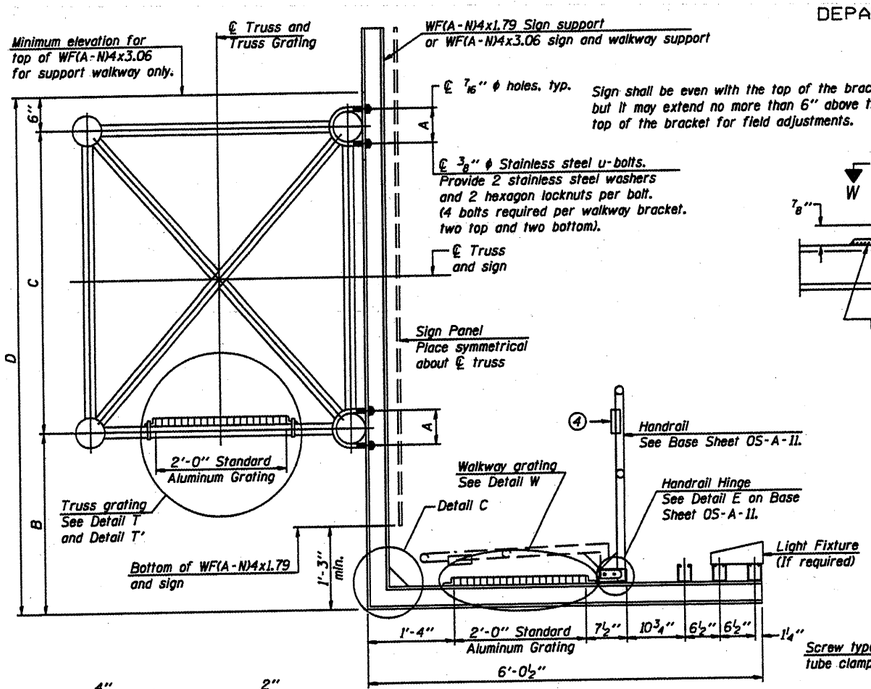

SECTION B-B

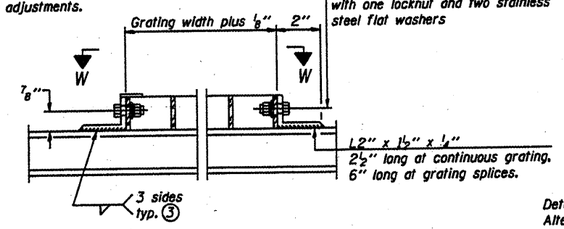

DETAIL W
(Walkway grating)

Drill ① 3/8" ϕ holes in walkway for 5/16" ϕ bolts, 1" long, each with one locknut and two stainless steel flat washers

L2" x 1½" x ¼" 2½" long at continuous grating, 6" long at grating splices.

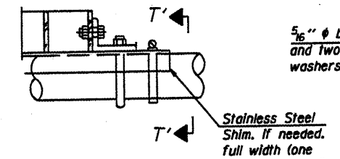

DETAIL T'
(Truss grating splice)
Details not shown same as Detail T. Alternate materials may be used subject to the Engineer's review and approval.

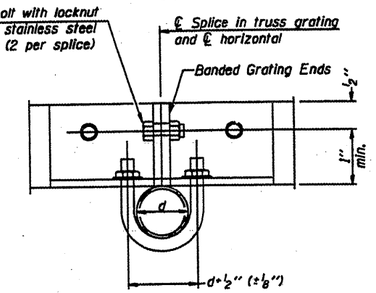

SECTION T'-T'

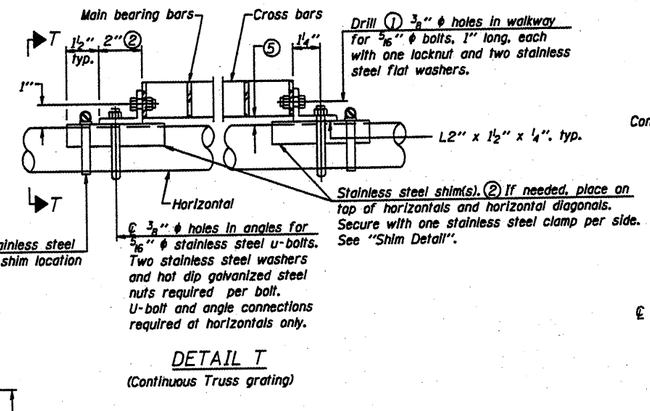

DETAIL T
(Continuous Truss grating)

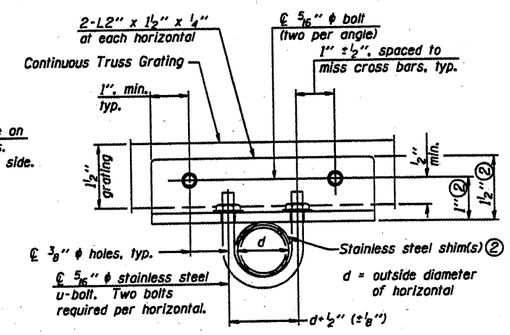

SECTION T-T

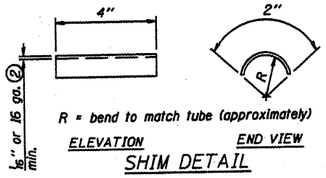

SHIM DETAIL

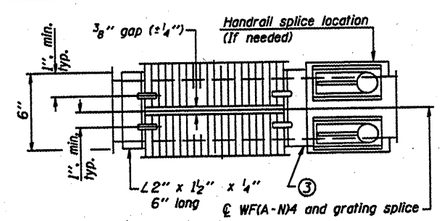

(AT WALKWAY GRATING SPLICE)

SPECIFICATIONS FOR STANDARD ALUMINUM GRATING

Main Bearing Bars shall be 3/16" x 1½" on 1 3/16" centers and conform to ASTM B221 Alloy 6061-T6.

Cross bars shall be 3/16" x 1½" on 4" centers and conform to ASTM B221 Alloy 6063-T5 or 6061-T6.

OR

Aluminum Grating with modified "I" sections for main bearing bars shall meet the following requirements:

Main bars shall conform to ASTM B221 Alloy 6061-T6 and have a minimum section modulus equal to 0.0705 in.³ per bar, a depth of 1½", spaced on 1 3/16" centers.

Cross bars shall conform to ASTM B221 Alloy 6063-T5 or T-42 and spaced on 4" centers.

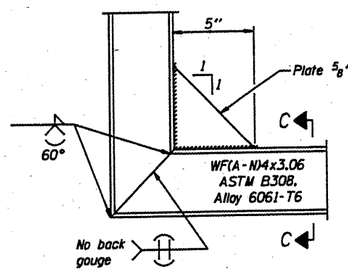

DETAIL C

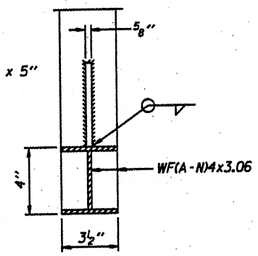

SECTION C-C

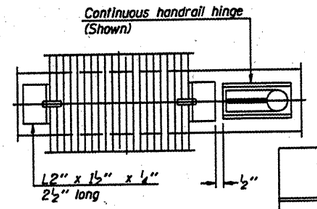

(CONTINUOUS WALKWAY GRATING)

SECTION W-W

Structure Number	Station	A	B	C	D

NUMBER	REVISION	DATE

DESIGNED -
CHECKED -
DRAWN -
CHECKED -

- 20
EXAMINED
ENGINEER OF BRIDGE DESIGN
PASSED
ENGINEER OF BRIDGES AND STRUCTURES

OS-A-10 5/16/08

OVERHEAD SIGN STRUCTURES
ALUMINUM WALKWAY DETAILS

District 4
Sign Structure Replacement

① Drilling holes in grating may be done in shop or field, based on Contractor's preference and subject to accurate alignment.

② Stainless steel shims shall be placed as shown in Detail T if needed to compensate for alignment variations between horizontal and diagonal pipes beyond adjustment provided by angles. Thicker shims may be used subject to shims performing properly.

③ If Handrail Joint present, weld angle to WF(A-N)4 and ¼" extension bars. (See Base Sheet OS-A-11.)

④ PL ⅛" x ½" x 2" welded to handrail posts to protect locations that contact grating.

⑤ Tube to grating gap may vary from 0 to ½", max. to align walkway, allow for camber, etc.