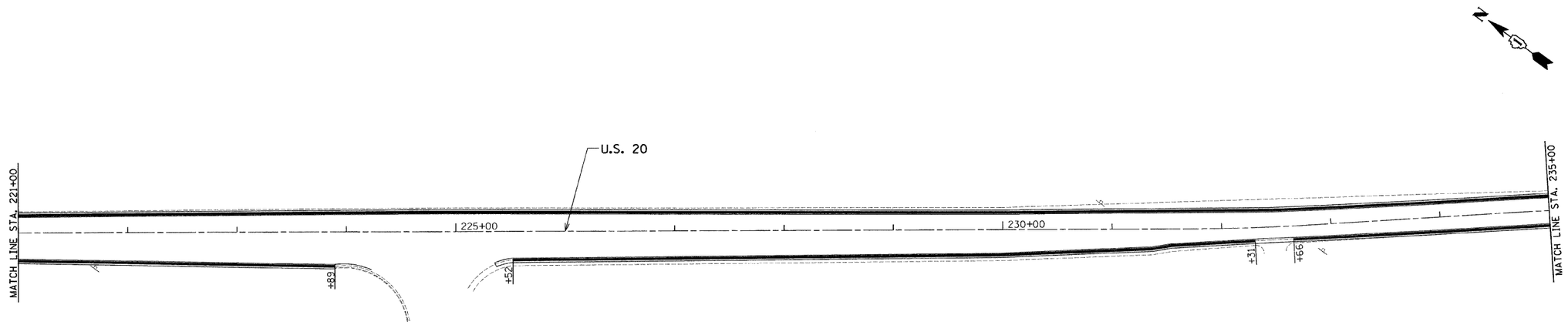

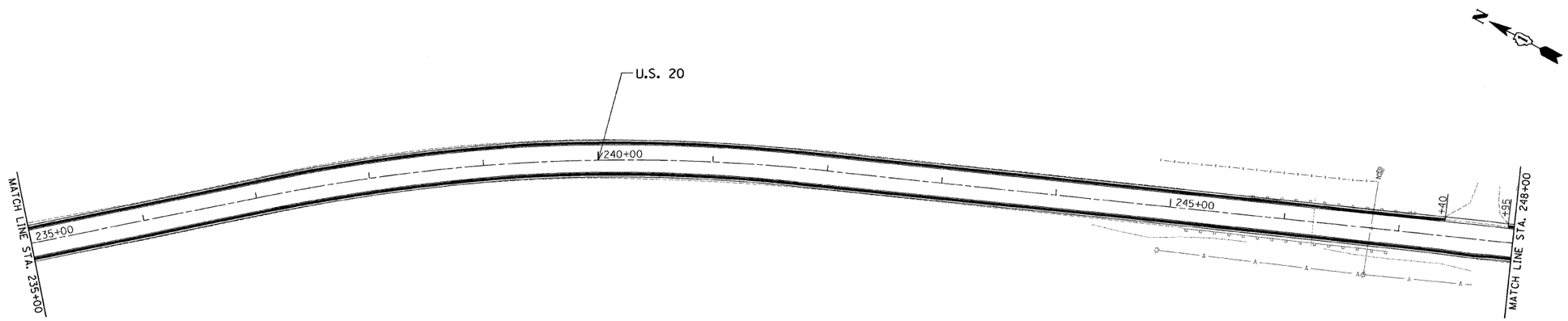

h:\jobs2009\20093023-15\cad\site\dgn\00\D160J37-sht-plan07.dgn
2/11/2010 4:01:08 PM

FILE NAME = $FILEL$	USER NAME = _USER_	DESIGNED - RS / EF	REVISED -	STATE OF ILLINOIS DEPARTMENT OF TRANSPORTATION	US 20 – WEST UNION ROAD TO IL 47 ROADWAY PLANS			F.A.U. RTE.	SECTION	COUNTY	TOTAL SHEETS	SHEET NO.
		DRAWN - JJ / EF	REVISED -					•	2009-089 I	••	46	15
	PLOT SCALE = 50.0000 ' / IN.	CHECKED - RS	REVISED -					•• McHENRY & KANE		CONTRACT NO. 60J73		
	PLOT DATE = 2/11/2010	DATE - 02-08-2010	REVISED -		SCALE: 50	SHEET NO. 7 OF 23 SHEETS	STA. 221+00 TO STA. 248+00	• 525/345	ILLINOIS	FED. AID PROJECT		