STATE OF ILLINOIS
DEPARTMENT OF TRANSPORTATION

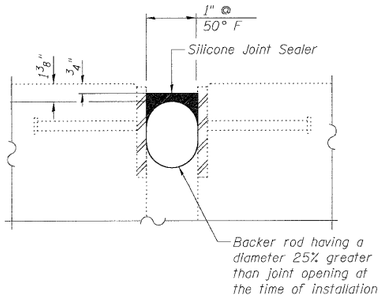

SILICONE JOINT SEALER DETAIL

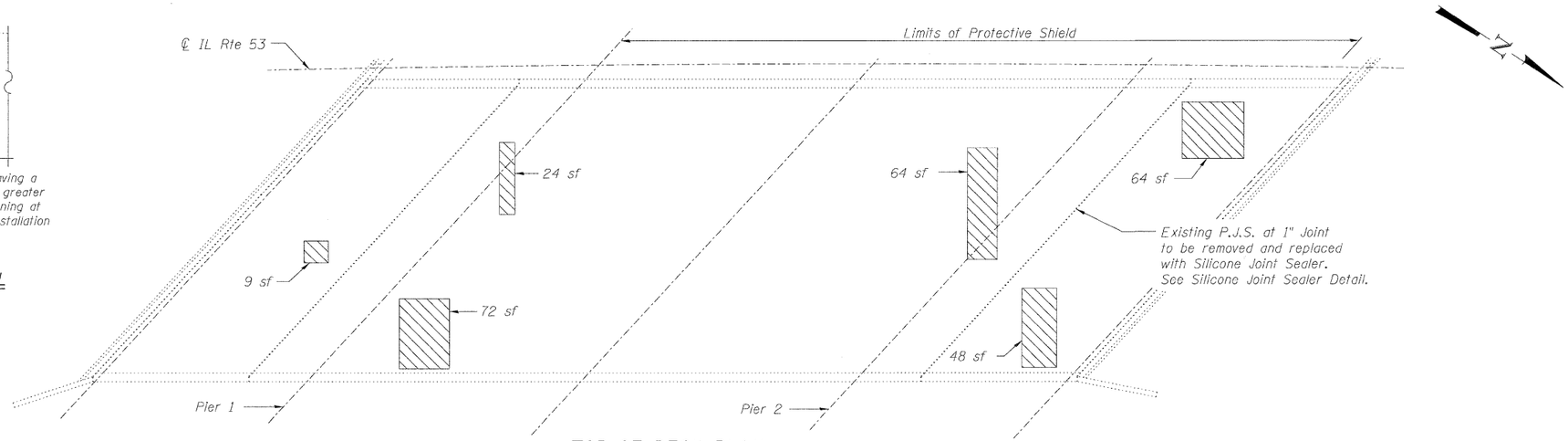

TOP OF DECK PLAN

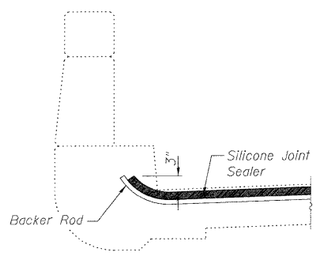

SILICONE JOINT SEALER END TREATMENT

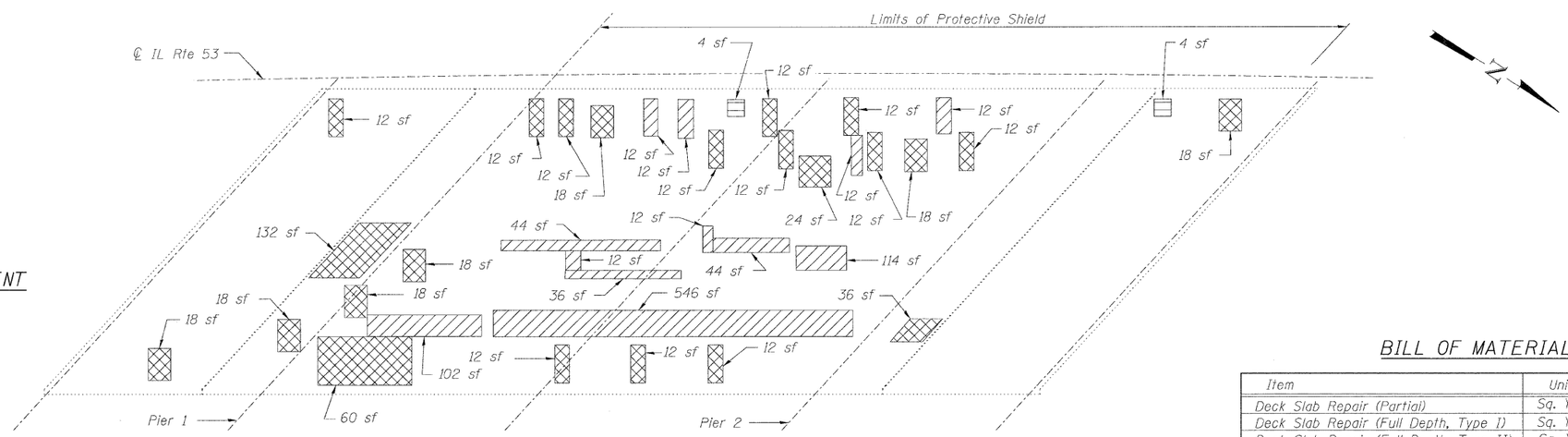

BOTTOM OF DECK PLAN

Note:
Cost of existing P.J.S. removal is included in the cost of Silicone Joint Sealer, 1".

BILL OF MATERIAL

Item	Unit	Total
Deck Slab Repair (Partial)	Sq. Yd.	35.9
Deck Slab Repair (Full Depth, Type I)	Sq. Yd.	1.0
Deck Slab Repair (Full Depth, Type II)	Sq. Yd.	66.7
Structural Repair of Concrete (Depth Equal To or Less Than 5 in.)	Sq. Ft.	12
Cleaning and Painting Exposed Rebar	Sq. Ft.	1102
Protective Shield	Sq. Yd.	934
Silicone Joint Sealer, 1"	Foot	158

Repair of the existing deck slab and parapets shall include but may not be limited to the areas shown. The actual areas to be repaired will be determined by the Engineer at the time of construction.

LEGEND

- Cleaning and Painting Exposed Rebar on Deck Slab Underside
- Indicates Deck Slab Repair (Full Depth, Type I)
- Indicates Deck Slab Repair (Full Depth, Type II)
- Indicates Deck Slab Repair (Partial)

sf Square Feet

WEST PARAPET ELEVATION

(Looking West)

SUPERSTRUCTURE REPAIR
STRUCTURE NO. 016-0376

LIN ENGINEERING, LTD. Consulting Engineers Chatham, Illinois	SHEET NO. 4	F.A.I. RTE.	SECTION	COUNTY	TOTAL SHEETS	SHEET NO.
Designed By: ESH / Checked By: MTH / Drawn By: ESH	9 SHEETS	290	(531-3.1,0305-302K)RS-5	COOK	314	227
Date: 12/2009 / File: 016-0376.dgn				CONTRACT NO. 60138		
		FED. ROAD DIST. NO. _	ILLINOIS	FED. AID PROJECT		