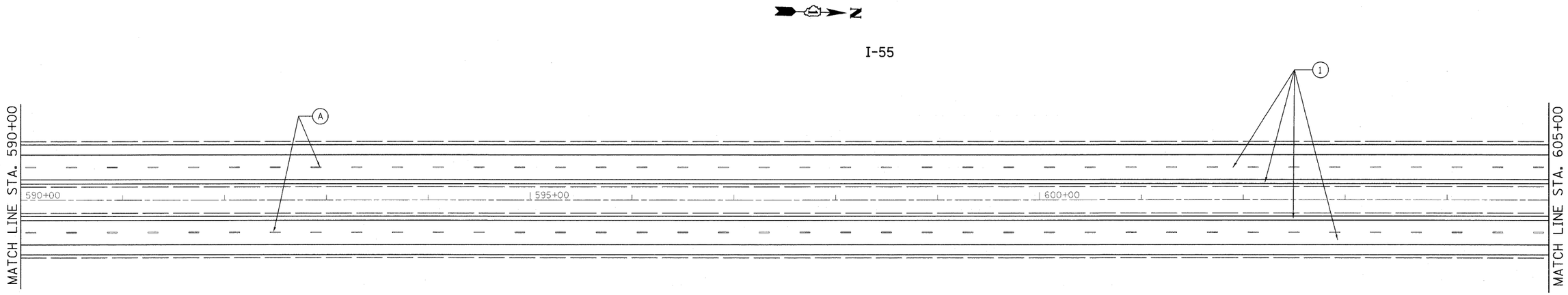

1 — PROP. HOT-MIX ASPHALT SURFACE REMOVAL, 4"
PROP. POLYMERIZED HMA SURFACE COURSE, SMA, N80, 2"
PROP. POLYMERIZED HMA BINDER COURSE, SMA, N80, 2"

2 — PROP. HOT-MIX ASPHALT SURFACE REMOVAL, 4"
PROP. HMA SURFACE COURSE, MIX. "D", N70, 1 1/2"
PROP. HMA BINDER COURSE, IL-19, N70, 2 1/2"

3 — PROP. HOT-MIX ASPHALT SURFACE REMOVAL, 2 1/4"
PROP. HMA SURFACE COURSE, MIX. "D", N70, 1 1/2"
PROP. POLY. LEVELING BINDER, IL-4.75, N50, 3/4"

A PROP. PREFORMED PLASTIC PAVEMENT MARKING, TYPE B-INLAID-LINE 5" (TYP.)

B PROP. THERMOPLASTIC PAVEMENT MARKING-LINE 4", WHITE (TYP.)

C PROP. THERMOPLASTIC PAVEMENT MARKING-LINE 4", YELLOW (TYP.)

D PROP. THERMOPLASTIC PAVEMENT MARKING-LINE 8", WHITE (TYP.)

E PROP. THERMOPLASTIC PAVEMENT MARKING-LINE 12", WHITE (TYP.)

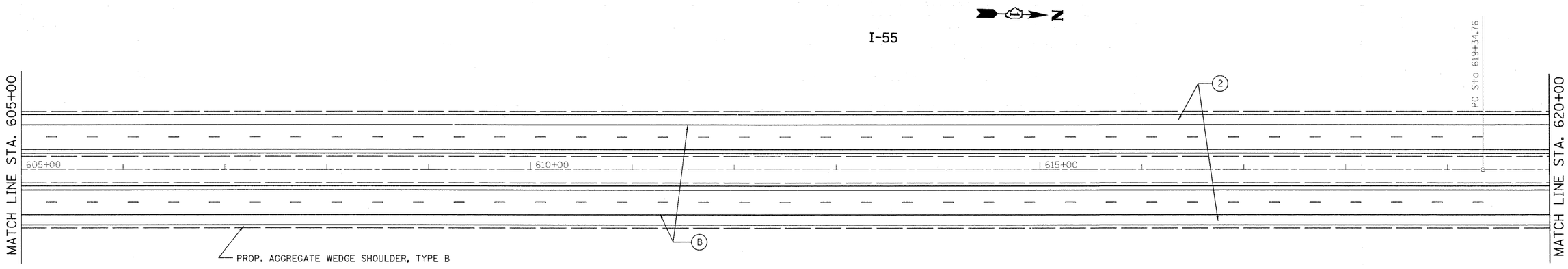

FILE NAME =	USER NAME = ebebawa	DESIGNED -	REVISED -	STATE OF ILLINOIS DEPARTMENT OF TRANSPORTATION	IL. ROUTE 55 KANKAKEE RIVER TO S. OF I-80	F.A.I. RTE.	SECTION	COUNTY	TOTAL SHEETS	SHEET NO.
c:\pw_work\PWIDOT\ABEBAWA\d0169692\sht-plan.dgn		DRAWN -	REVISED -			55	99 (1&2) RS-12	WILL	110	28
	PLOT SCALE = 50.0000 ' / IN.	CHECKED -	REVISED -					CONTRACT NO. 60K04		
	PLOT DATE = 2/11/2010	DATE -	REVISED -		SCALE: SHEET NO. OF SHEETS STA. TO STA.		ILLINOIS FED. AID PROJECT			