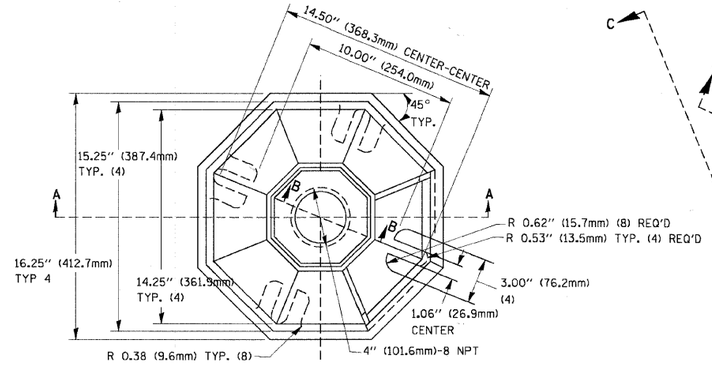

TOP VIEW

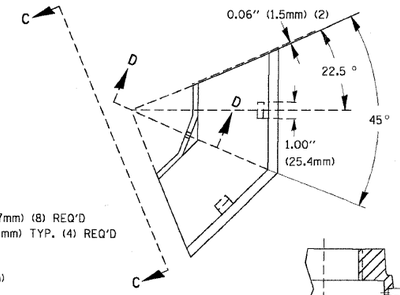

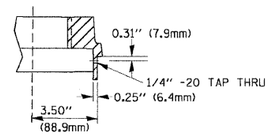

SECTION B-B

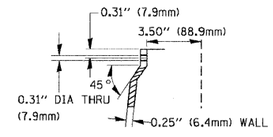

SECTION D-D

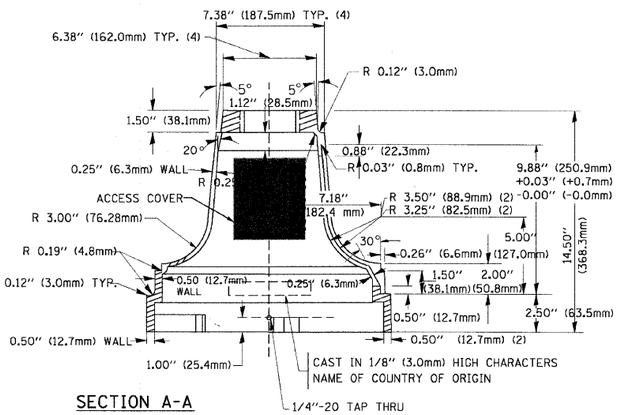

SECTION A-A

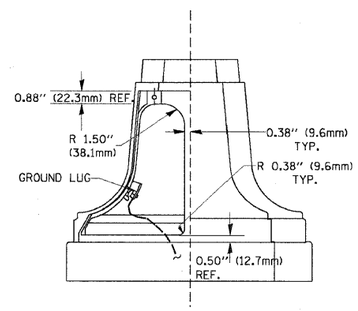

VIEW C-C

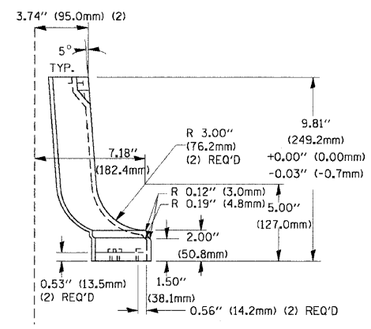

TRAFFIC SIGNAL POST - MOUNTING BASE - TYPE A

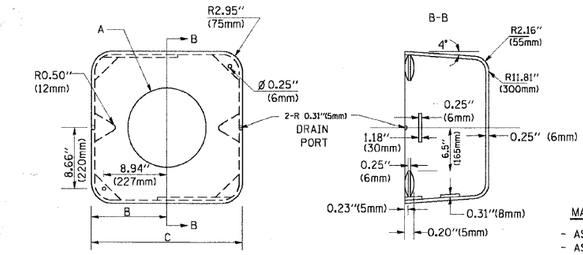

MATERIAL:
- ASTM A36 STEEL
- ASTM A-123 HOT DIPPED GALVANIZED

A	B	C	HEIGHT	WEIGHT
VARIES	9.5"(241mm)	19"(483mm)	7" (178mm) - 12" (300mm)	53 lbs (24kg)
VARIES	10.75"(273mm)	21.5"(546mm)	7" (178mm) - 12" (300mm)	68 lbs (31 kg)
VARIES	13.0"(330mm)	26"(660mm)	7" (178mm) - 12" (300mm)	81 lbs (37 kg)
VARIES	18.5"(470mm)	37"(940mm)	7" (178mm) - 12" (300mm)	126 lbs (57 kg)

SHROUD

NOTES:

1. DIMENSION "A" IS EQUAL TO THE DIAMETER OF THE MAST ARM POLE AT THE TOP OF THE SHROUD. THE SHROUD SHALL BE TIGHT TO THE MAST ARM POLE.
2. THE SUPPLIER SHALL VERIFIED THE ABOVE DIMENSIONS BASED ON MAST ARM REQUIREMENTS.
3. THE HEIGHT OF THE SHROUD SHALL COVER THE ANCHOR BOLTS, NUTS AND MAST ARM POLE BASE.

NOTE:
SUPPORT EXISTING CABINET AND CONTROL EQUIPMENT ABOVE FOUNDATION TO KEEP TRAFFIC SIGNAL FUNCTIONING WHILE FOUNDATION MODIFICATION WORK IS PROCEEDING.

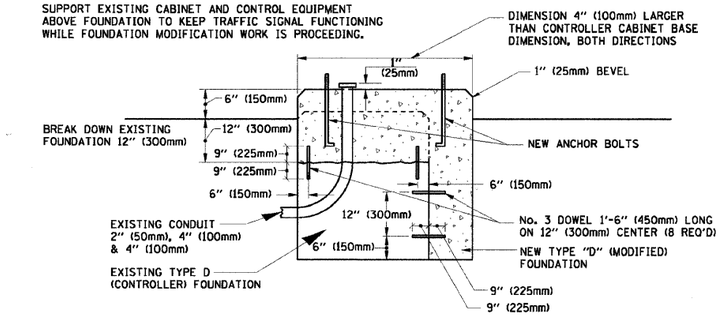

MODIFY EXISTING TYPE "D" FOUNDATION

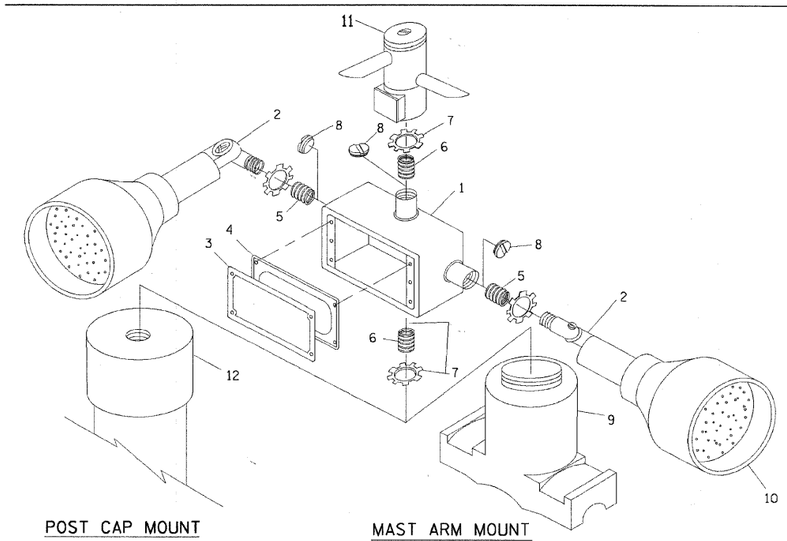

POST CAP MOUNT

MAST ARM MOUNT

EMERGENCY VEHICLE DETECTOR WITH CONFIRMATION BEACON MOUNTING DETAIL

ITEM NO.	IDENTIFICATION
1	OUTLET BOX- GALV. 21 CU.IN. (0.000344 CU-M)
2	LAMP HOLDER AND COVER
3	OUTLET BOX COVER
4	RUBBER COVER GASKET
5	REDUCING BUSHING
6	3/4"(19 mm) CLOSE NIPPLE
7	3/4"(19 mm) LOCKNUT
8	3/4"(19 mm) HOLE PLUG
9	SADDLE BRACKET - GALV.
10	6 WATT PAR 38 LED FLOOD LAMP
11	DETECTOR UNIT
12	POST CAP [18 FT. (5.4 m) POST MIN.]

NOTES:

1. ALL ELECTRICAL ITEMS, EXCEPT ITEMS #2 AND #11 SHALL BE ALUMINUM OR GALVANIZED
2. ITEM #1- OZ/GEDNEY FSX-1-50 OR EQUIVALENT
   ITEM #2- MULBERRY CON-O-SHADE LAMP SHIELD OR EQUIVALENT
   ITEM #9- "BAND-IT" SADDLE BRACKET OR EQUIVALENT
3. WHEN POST MOUNTING IS SPECIFIED, ITEM #9 SHALL NOT BE REQUIRED. THE DETECTION UNIT SHALL BE MOUNTED DIRECTLY ON TOP OF THE CAP BY DRILLING AND TAPPING A 3/4"(19 mm) HOLE WITH PIPE THREADS. THE POST CAP SHALL EITHER BE SCREWED TO THE TOP OF THE POST OR A MINIMUM OF 3 TIGHTENING SCREWS SHALL BE REQUIRED ON EACH CAP.

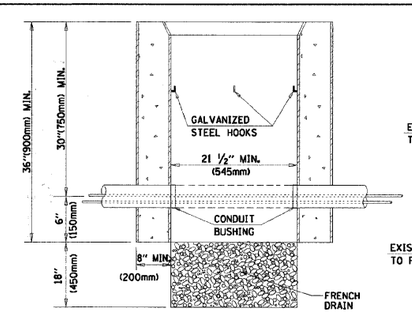

ELEVATION

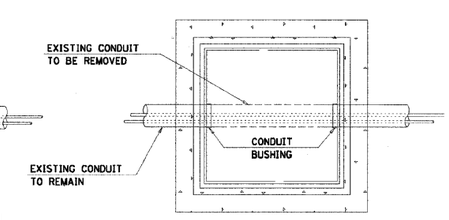

PLAN

NOTES:

1. HANDHOLE CONSTRUCTED PER STATE STANDARD 814001.
2. REMOVAL OF THE EXISTING CONDUIT FROM THE HANDHOLE AND THE INSTALLATION OF THE CONDUIT BUSHINGS SHALL BE INCIDENTAL TO THE HANDHOLE.

HANDHOLE TO INTERCEPT EXISTING CONDUIT

PLAN		BY	DATE
SURVEYED			
PLOTTED			
ALIGNMENT CHECKED			
RT-OF-WAY CHECKED			
CADD FILE NAME			
NOTE BOOK			
NO.			

PROFILE		BY	DATE
SURVEYED			
PLOTTED			
GRADES CHECKED			
CADD FILE NAME			
NOTE BOOK	STRUCTURE NOTAT'RS CHKD		
NO.			

FILE NAME = ...\fin_dwg\6910_2_sigdet04.dgn	USER NAME = _USER_	DESIGNED -	REVISED -
		DRAWN JMR	REVISED -
	PLOT SCALE = $SCALE$	CHECKED JRS	REVISED -
	PLOT DATE = 3/11/2010	DATE -	REVISED -

STATE OF ILLINOIS
DEPARTMENT OF TRANSPORTATION

DISTRICT ONE
STANDARD TRAFFIC SIGNALS
DESIGN DETAILS

SCALE: | SHEET NO. OF SHEETS | STA. TO STA.

F.A.U. RTE.	SECTION	COUNTY	TOTAL SHEETS	SHEET NO.
3902	05-00258-00-TL	KANE	61	8
		CONTRACT NO. 63251		
FED. ROAD DIST. NO.	ILLINOIS	FED. AID PROJECT		