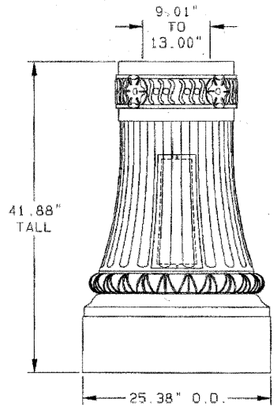

DETAIL 9 — HN25AB DECORATIVE BASE

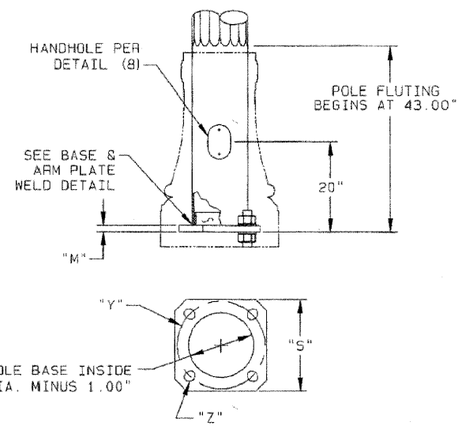

DETAIL 10 — HN25AB POLE BASE

(4)-ANCHOR BOLTS, GALVANIZED THE FULL LENGTH. EACH BOLT FURNISHED WITH (2)-HEX NUTS, (2)-FLAT WASHERS AND (1)-LOCKWASHER.

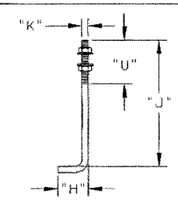

DETAIL 11 — ANCHOR BOLT

NOTES:

1. POLE AND ARM SHAFTS 13.00" AND SMALLER-CONFORMS TO ASTM DESIGNATION: A595 GR. A WITH 55,000 P.S.I. MININMUM YIELD STRENGTH. LINEAR TAPER-0.14"/FT. POLE AND ARM SHAFTS LARGER THAN 13.00"-CONFORMS TO ASTM DESIGNATION: M-223 A572 GR. 65 WITH A 65,000 P.S.I. MINIMUM YIELD STRENGTH. LINEAR TAPER-0.14"/FT.
2. BASE PLATE AND SIMPLEX PLATES-CONFORM TO AASHTO M-183 (ASTM: A36).
3. ANCHOR BOLTS-ALL STRUCTURES: ASTM F1554 GR.55 55,000 P.S.I. MINIMUM YIELD STRENGTH. (AASHTO M314)
4. TRAFFIC SIGNAL ARM END CAP SECURED IN PLACE WITH 3 STAINLESS STEEL SET SCREWS. (TRAFFIC SIGNAL ARM END CAP PROVIDED WITH (2) ADDITIONAL STAINLESS STEEL HEX BOLTS).
5. ALL NON-STAINLESS THREADED FASTENERS TO BE HOT DIP GALVANIZED TO ASTM DESIGNATION: A153 (AASHTO M232).
6. SIMPLEX CONNECTING BOLTS-ASTM DESIGNATION: A325 (M164) GALVANIZED TO ASTM DESIGNATION: A153 LUBRICATE THREADS IN FIELD IF NECESSARY BEFORE INSTALLATION.
7. ALL VEHICULAR AND/OR PEDESTRIAN SIGNAL LIGHTS AND NECESSARY HARDWARE FOR ATTACHMENT TO BE FIELD LOCATED AND FURNISHED BY OTHERS.
8. POLES AND ARMS TO BE GALVANIZED TO ASTM DESIGNATION: A123 (AASHTO M111). ACCESSORIES TO BE HOT DIP GALVANIZED TO ASTM DESIGNATION: A153 (AASHTO M232).
9. ACCESS HOLES IN ARMS AT SIGNALS TO BE FIELD DRILLED BY CONTRACTOR-LOCATED AS SHOWN IN PLANS.
10. LUMINAIRE ARM SHAFT CONFORMS TO 2" SCHEDULE 40 PIPE W/ 36,000 PSI MIN. YIELD STRENGTH.
11. SHAFT GAUGE OR THICKNESS ARE AS FOLLOWS: 11 GA.= 0.1196", 7 GA.= 0.1793", 5 GA.= 0.2092", 3 GA.=0.2391", AND 2" SCHED.40 PIPE = 0.154".

LOADING AND ALLOWABLE STRESS CRITERIA: 1994 AASHTO "STANDARD SPECIFICATIONS FOR STRUCTURAL SUPPORTS FOR SIGNS, LUMINAIRES AND TRAFFIC SIGNALS".

STATE OF ILLINOIS

GENERAL NOTES

POLE AND SIGNAL ARM DATA - OPTION 1

POLE TUBE				POLE BASE				ANCHOR BOLT				SIGNAL ARM TUBE			MAXIMUM LUMINAIRE ARM SPAN (FT)
BASE DIA. (IN)	TOP DIA. (IN)	LENGTH (FT)	GAUGE OR THK. (IN)	SQUARE "S" (IN)	BOLT CIRCLE "Y" (IN)	THK. "M" (IN)	HOLE / SLOT "Z" (IN)	DIA. "K" (IN)	LENGTH "J" (IN)	HOOK "H" (IN)	THREAD LENGTH "U" (IN)	FIXED END DIA. (IN)	GAUGE OR THICK (IN)	SPAN (FT)	
12.50	8.65	27.50	5	17.00	17.00	1.50	1.75	1.50	54.00	6.00	8.00	9.00	7	20.00	8.00

POLE AND SIGNAL ARM DATA - OPTION 2

POLE TUBE				POLE BASE				ANCHOR BOLT				SIGNAL ARM TUBE			MAXIMUM LUMINAIRE ARM SPAN (FT)
BASE DIA. (IN)	TOP DIA. (IN)	LENGTH (FT)	GAUGE OR THK. (IN)	SQUARE "S" (IN)	BOLT CIRCLE "Y" (IN)	THK. "M" (IN)	HOLE / SLOT "Z" (IN)	DIA. "K" (IN)	LENGTH "J" (IN)	HOOK "H" (IN)	THREAD LENGTH "U" (IN)	FIXED END DIA. (IN)	GAUGE OR THICK (IN)	SPAN (FT)	
12.50	8.65	27.50	5	17.00	17.00	1.50	1.75	1.50	54.00	6.00	8.00	8.00	7	20.00	8.00

PLAN — SURVEYED / PLOTTED / ALIGNMENT CHECKED / RT. OF WAY CHECKED / CADD FILE NAME / NOTE BOOK NO. / BY / DATE

PROFILE — SURVEYED / PLOTTED / GRADES CHECKED / B.M. NOTED / STRUCTURE NOTATIONS CHKD / NOTE BOOK NO. / BY / DATE

JOB

TITLE TRAFFIC SIGNAL STRUCTURES

VALMONT INDUSTRIES, INC. RESERVES THE RIGHT TO INSTALL VARIOUS, ENGINEER APPROVED, MATERIAL HANGING ACCOMMODATIONS TO FACILITATE THE MANUFACTURING PROCESS.

valmont
Valley, NE 68064
(402) 359-2201

ORDER NUMBER: 4Z203-07
PAGE NUMBER: 2 OF 2
DRAWING NUMBER IL4Z20307 REV

FILE NAME = ...\Trans\fin_dwg\698_2_det03.dgn	USER NAME = _USER_	DESIGNED -	REVISED -	STATE OF ILLINOIS DEPARTMENT OF TRANSPORTATION	MISCELLANEOUS DETAILS	F.A.U. RTE.	SECTION	COUNTY	TOTAL SHEETS	SHEET NO.
		DRAWN JMR	REVISED -			3902	05-00258-00-TL	KANE	61	59
	PLOT SCALE = $SCALE$	CHECKED JRS	REVISED -					CONTRACT NO. 63251		
	PLOT DATE = 3/11/2010	DATE -	REVISED -		SCALE: SHEET NO. OF SHEETS STA. TO STA.	FED. ROAD DIST. NO.	ILLINOIS	FED. AID PROJECT		