HEUER AND ASSOCIATES Consulting Engineers 2315 Enterprise Drive - Suite 102 Westchester, IL 60154-5811 708-492-1000	F.A.U. RTE.	SECTION	COUNTY	TOTAL SHEETS	SHEET No.
	1004	08-00079-03-FP	COOK	94	86
	STA.		TO STA.		
	FED. ROAD DIST. NO. 1	ILLINOIS	FED. AID PROJECT		

CONTRACT No. 63353

PLAN

		BY	DATE
SURVEYED			
PLOTTED			
ALIGNMENT CHECKED			
GRADES CHECKED			
BLUE TOP SHEETED			
CADD FILE NAME			
NOTE BOOK NO.			

NOTE: FIRE HYDRANT TO CONFORM TO VILLAGE OF LA GRANGE STANDARDS

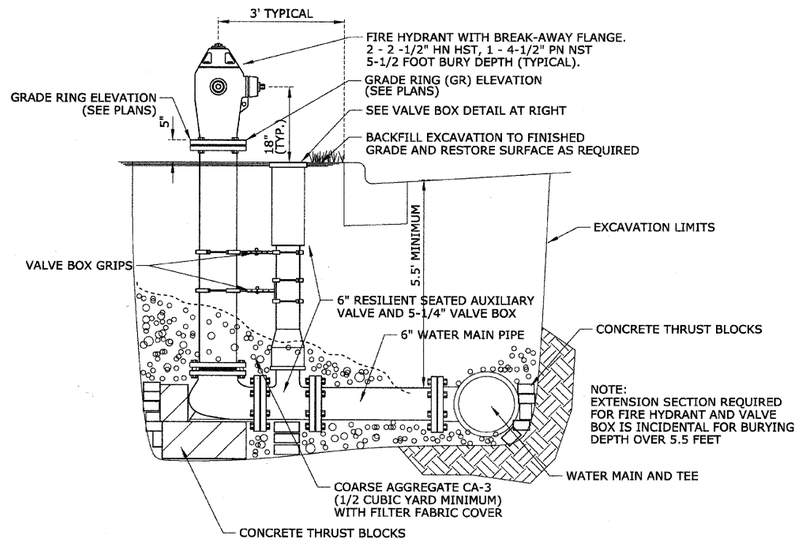

FIRE HYDRANT INSTALLATION DETAIL

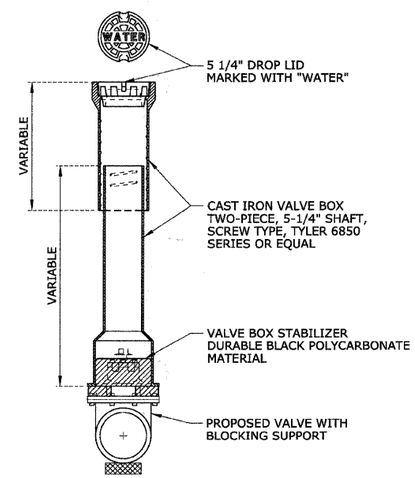

VALVE BOX DETAIL

PROFILE

		BY	DATE
SURVEYED			
PLOTTED			
GRADES CHECKED			
BLUE TOP SHEETED			
STRUCTURE NOTATIONS CHKD			
NOTE BOOK NO.			

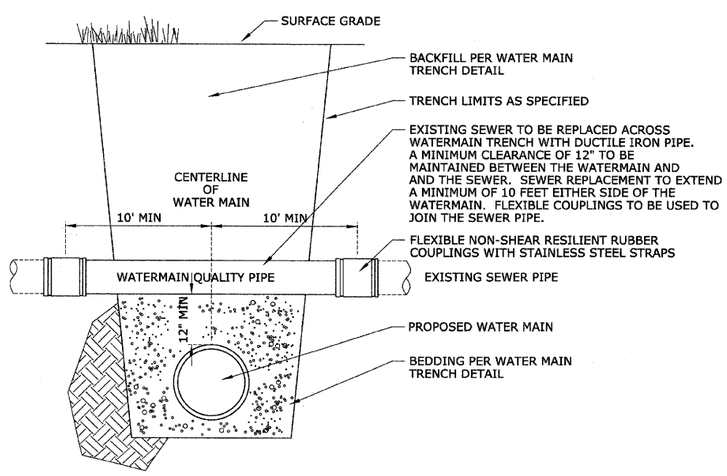

SEWER CROSSING DETAIL

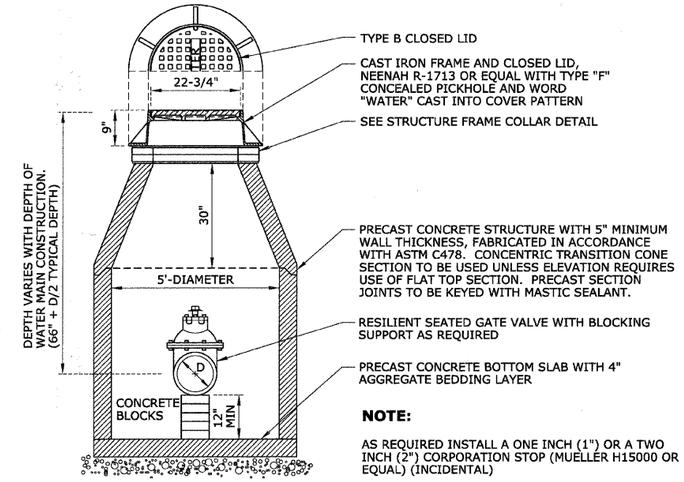

NOTE:

AS REQUIRED INSTALL A ONE INCH (1") OR A TWO INCH (2") CORPORATION STOP (MUELLER H15000 OR EQUAL) (INCIDENTAL)

WATER VALVE VAULT, TYPE A, 5'-DIAMETER WITH RESILIENT SEATED GATE VALVE

AND TYPE 1 FRAME AND CLOSED LID

REVISIONS	
NAME	DATE

ILLINOIS DEPARTMENT OF TRANSPORTATION

BLUFF AVENUE IMPROVEMENTS STAGE 3

CONSTRUCTION DETAILS - SPECIAL

SCALE: NTS — DRAWN BY H&A

DATE 11/30/2009 — CHECKED BY JRH