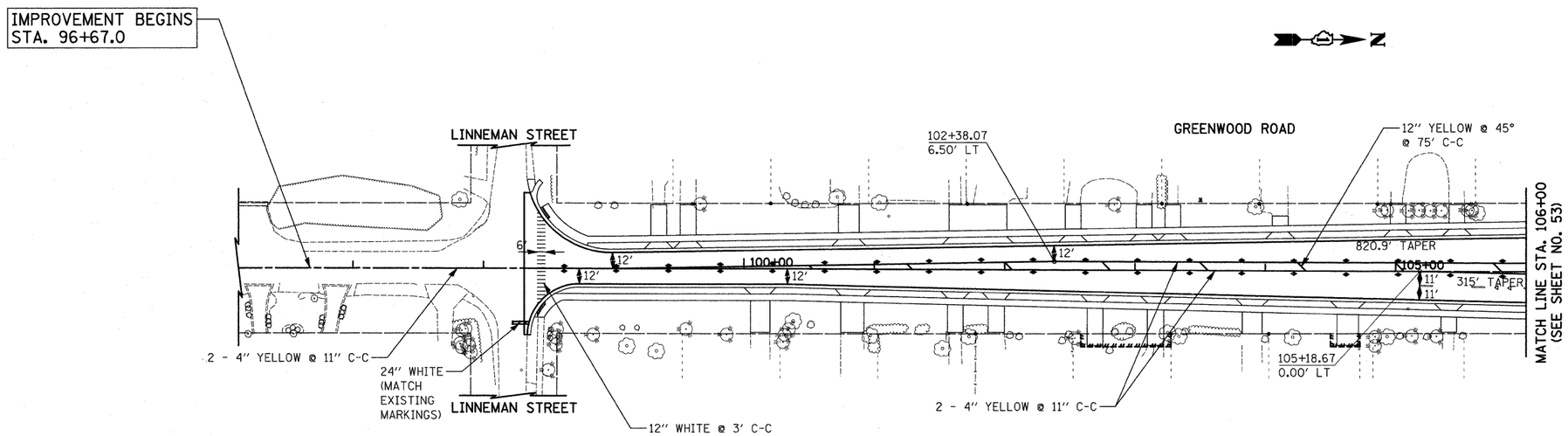

GENERAL NOTES

1. DIMENSIONS TO PAVEMENT MARKINGS ARE TO THE CENTER OF A SINGLE LINE OR THE CENTER OF GAP FOR A DOUBLE LINE.
2. SEE I.D.O.T. STANDARD TC-13 (SHEET NO. 77) FOR TURN LANE MARKING DETAILS.
3. SEE IDOT STANDARD TC-11 (SHEET NO. 76) FOR RAISED REFLECTIVE PAVEMENT MARKER DETAILS.
4. ALL PERMANENT PAVEMENT MARKINGS ON CONCRETE SURFACES SHALL BE PAINT. ALL PERMANENT PAVEMENT MARKINGS ON ASPHALT SHALL BE THERMOPLASTIC.

LEGEND

- PROPOSED WHITE LETTERS AND SYMBOLS
- ONE-WAY CRYSTAL RAISED REFLECTIVE PAVEMENT MARKER
- ONE-WAY YELLOW RAISED REFLECTIVE PAVEMENT MARKER
- TWO-WAY YELLOW RAISED REFLECTIVE PAVEMENT MARKER

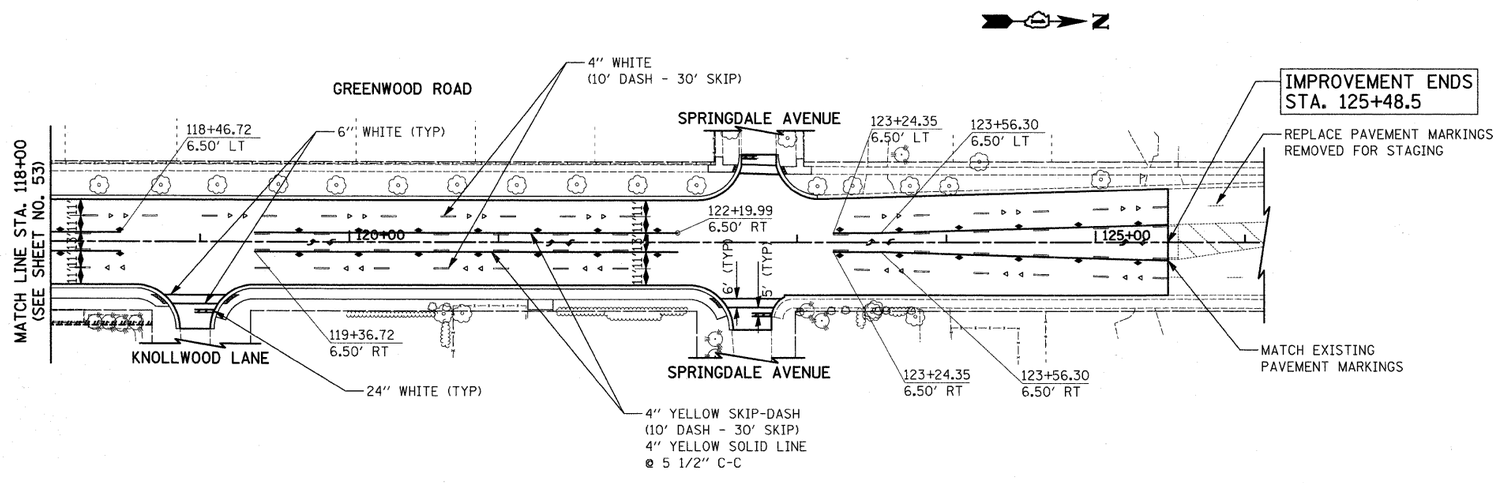

50 0 50
SCALE IN FEET

FILE NAME = J:\2275\Cad\Sheet\2275_Pvt_Mkg_2.dgn	USER NAME = blg	DESIGNED - JAT	REVISED -	STATE OF ILLINOIS DEPARTMENT OF TRANSPORTATION	PAVEMENT MARKING PLAN	F.A.U. RTE.	SECTION	COUNTY	TOTAL SHEETS / SHEET NO.
		DRAWN - JAT	REVISED -			2743	05-00161-00-CH	COOK	112 / 54
	PLOT SCALE = 50.0000 ' / IN.	CHECKED - DJK	REVISED -					CONTRACT NO. 63383	
	PLOT DATE = 11/23/2009	DATE - 11-23-09	REVISED -		SCALE: / SHEET NO. 2 OF 2 SHEETS / STA. / TO STA.	FED. ROAD DIST. NO. 1	ILLINOIS	FED. AID PROJECT M-8003(543)	